TABLE OF CONTENTS

Section	Title	Page
1	Forcible Entry History …….	1
2	The Beginning	
3	Responsibility	
4	Tools Conventional tools Thru-the-lock tools Hydraulic tools External lock tools Power tools Specialty tools Modified tools	
5	Types of Locks Key-in-the-knob lock Tubular lock Rim lock Mortise lock Magnetic lock	
6	Types of Doors Wood and glass panel door Wood door Metal door Multi-lock door Tempered glass door Aluminum frame glass door Replacement door Sliding door Pocket door	
7	Additional Security Devices Sliding bolt Static bar Angle iron Cylinder Guards Home-made locking devices Lock box	
8	Conventional Forcible Entry Definition Entry size-up Steps for forcing a door Striking the Halligan tool Alternate methods to gap a door Halligan tool gets stuck in a door Drive the lock off the door Angle Iron Narrow hallways/recessed doors/tight spaces	

TABLE OF CONTENTS

Section	Title	Page
8 (cont)	Conventional Forcible Entry (cont)	
	Outward opening door	
	Difficulty gaining a purchase	
	Metal strip on the edge of the door	
9	Hydraulic Forcible Entry Tools	
	Steps for forcing a door	
	Alternative methods to forcing a door	
	Angle iron on door	
	Magnetic lock	
	Multi-lock door	
10	Hinges	
	Types of hinges	
	Forcing hinges	
	Batter the door	
	Standard hinge	
	Self-closing hinge	
	Pin hinge	
11	Chocking the door	
12	Thru-the-Lock Entry	
	Introduction	
	Size-up	
	Key-in-the-knob lock	
	Outward swinging door	
	Tubular locks	
	Rim locks	
	Forcing a rim lock	
	Special types of rim locks	
	Mortise locks	
	Forcing a mortise lock	
	Pivoting dead bolt	
	Forcing a pivoting dead bolt	
13	Padlocks	
	Introduction	
	Categories of padlocks	
	Padlock size-up	
	Light duty padlocks	
	Heavy duty padlocks	
	Special padlocks	
	Gate locks	
	Associated hardware	
	Power tool techniques for forcing padlocks	
	Other tools for forcing padlocks	
14	Roll-Down Doors/Gates	
	Introduction	
	Fireground Problems	

TABLE OF CONTENTS

Section	Title	Page
14 (cont)	Roll-Down Doors/Gates (cont)	
	Types of doors/gates	
	Sliding scissor gate	
	Manual roll-down gate	
	Mechanical roll-down gate	
	Electric roll-down gate	
	Open grill/designer gate	
	Airplane hanger/bi-fold door	
	Residential garage door	
	Locking devices	
	Cutting the roll-down	
	Additional locks and shield	
15	Miscellaneous Security Problems	
	Window bars	
	Window gates	
	Iron gates	
	Child guard gates	
	Window/door barriers	
	Plywood covered window/door	
	Warehousing	
	Bulkhead doors	
16	Tips and Techniques	
	The Halligan Tool	
	The Axe	
17	Definitions	

SPECIAL THANKS & ACKKNOWLEDGEMENTS

A special thanks to FDNY for their dedication and commitment that has made this forcible entry chapter.

"The effort to complete this manual is dedicated to the sons of Captain John Vigiano, Firefighter John T. Vigiano II (Ladder Company 132) and Detective 2nd Grade Joseph V. Vigiano (NYPD– Emergency Services Truck 2) and all of the first responders who gave their lives on September 11, 2001"
-FDNY

ACKNOWLEDGEMENTS
Captain John Vigiano (Ladder Company 176, retired)
Robert Morris (Rescue Company 1)
Lt. Mickey Conboy (Squad 41)
Captain Bill Youngston (Ladder Company 133, retired)
Captain Dennis Murphy (Squad 288, retired)
BC Stephen Geraghty (Battalion 50)
FF Kenneth DiTata (Ladder Company 111)
Firefighter James Cody (Ladder Company 24)
Firefighter John Faracco (Ladder Company 28, retired)
Included illustrations Zack Herman (Bridgeport FD) & Joe Fisher

Section 1

Forcible Entry History

FORCIBLE ENTRY HISTORY

Everyone associated with the fire service is familiar with the term "fire stories." Whenever a group of firefighters come together, the stories begin to start. They may be about a fire they just fought or the firefighter who performed a daring rescue or simply, a critique of an operation. Whatever the topic may be, as the years go by the story seems to get a bit better every time it is re-told.

In the New York City Fire Department (FDNY), most of these tales are centered around the kitchen table. They usually begin at the start of the tour when the members report in for duty. If a story is good, it will carry over to the lunch meal and sometimes into the evening meal. You know a story is exceptional when you begin to hear it from other units when you come together at an operation. In the Marine Corps we often called these tales, "sea stories." No matter what they are called, they were usually entertaining and in most cases there was something to be learned from them.

When I first became a member of the FDNY, I had the opportunity to work in a relatively busy ladder company in the East New York section of Brooklyn. As a new member, I was constantly trying to learn from the more senior members. Some of these men had been on the job for nearly twenty years and were quite willing to share their experiences and knowledge. This was especially true during the late watches, the "twelve-bye" (12 x 3) or the "three-bye" (3 x 6). It was during these lonely hours that I first heard of Chief Hugh Halligan.

Hugh Halligan had been a member of the FDNY from 1916 to 1959. In a span of 43 years, he rose up from probationary firefighter to Deputy Chief. In 1941, Hugh Halligan was appointed to the rank of First Deputy Commissioner, a position he held for a few years before returning to the uniform ranks. During his tenure he worked in all eleven of the FDNY's bureaus.

As a young firefighter eager to learn about my job, I was not interested in the political or promotional achievements of Hugh Halligan, I was interested in a tool that carried his name; the Halligan Tool.

Most tools or equipment used in the fire service are rarely designed specifically for the fire service. In fact, most start out in a different role. Usually a firefighter adapts or modifies a particular tool or device for use in firefighting. The "Halligan" was a tool designed by a firefighter and made specifically for the fire service; Hugh Halligan was the man that accomplished this.

The Claw Tool

Webster's dictionary defines "folklore" as a noun meaning a popular superstition or legend, the study of traditional beliefs. In firematic folklore, there is a story about a fire in a bank somewhere in lower Manhattan back in the early years of the New York City Fire Department. As the story goes, the fire was set to cover the traces of a burglary. As the firefighters were "overhauling" (sifting through the rubble), they came upon a tool that was unusual in design. Further investigation determined this tool was used to force entry into the bank. The men reasoned that any tool that was efficient enough to gain entry into a bank would be ideal for the fire service. (Note, banks back then were not the fortified fortresses we have today.)

The chief requested permission to keep the tool and gave it to the Ladder Company to add to their inventory of equipment. This particular tool was approximately 36 inches long and weighed about 12 pounds. At one end it had a "hook" and the other end a "fork." Because of its unique design, it was dubbed the "Claw Tool." Soon, this tool reproduced many times over, became the main forcible entry tool for the New York City Fire Department.

As effective as it was it was not designed correctly for the task it was given. To illustrate, if the driving head of an ordinary chisel was curved in the same manner as the corresponding part of the Claw Tool, a hammer blow would strike off center causing many craftsman to have to buy three fingered gloves. Since the main function of forcible entry at that time was to "jimmy" open a door by driving the fork end of the tool between the door and the doorframe with the aid of an axe, there was left little margin for error. Many firefighters who used this tool were left with sore and bruised elbows and arms.

The Kelly Tool

Throughout the years, many excellent forcible entry tools were introduced to the fire service. None were as progressive as the "Kelly Tool" which was designed by Captain John F. Kelly of the New York City Fire Department. Captain Kelly, while assigned to Ladder Company 163, took the first step in making a tool that had a straight drive for impact. By removing the "hook" he lessened the possibility of hitting off-center, but did sacrifice the advantage of the "hook" of the Claw Tool. His tool, like the Claw Tool, was made of heavy steel approximately 24 inches long. One end had an "Adz" at 90 degrees to the shaft and the other end of the shaft had a chisel. The weight was also approximately 10 pounds.

"The Irons"

Since the Claw Tool had the desired features of the "hook" and the "fork" and also the fact that it had been around for quite some time, made it very popular with the firefighters. It was considered the primary forcible entry tool. The Kelly Tool (also known as the lock breaker) offered a straight drive with either the adz or the chisel. Together, these two tools could force just about any door or locking device. As the years went by, these two tools became known as "the irons" and were usually carried by the firefighter charged with the responsibility of forcible entry. This man usually connected these heavy tools with a short piece of rope and hung them over his shoulders…hence the term, "Irons man."

The Halligan Tool

Since these tools were heavy and unwieldy, the tools often mastered the man. It was apparent that a lighter but equally efficient tool was needed. Chief Halligan recognized this problem and with the backing of Fire Commissioner John J. McElligott, he set upon a project to design such a tool.

For the next couple of years he worked on designing a tool that he knew had to be perfect, for firefighters are not swayed very easily. When they have something that works, they generally do not like to change. They had to have faith in the tool for it to be accepted. His design gave the firefighters the solid feel they wanted at the three driving heads. The lightness (8 ¼ pounds) and

strength permitted the use of the tool for long periods without fatigue. One end of the tool had an adz and pike. The adz had a sweep to it that was an improvement over the Kelly Tool. The "pike" (at a 90-degree angle to the adz) replaced the hook of the Claw Tool. The other end of the shaft contained the fork, which was so popular with the old Claw Tool.

It seems Chief Halligan was so pleased with his finished product he began his own mill to manufacture and distribute these tools. Soon he began to sell them to fire and emergency units nationwide. By 1950, every ladder company in the city of Boston was outfitted with the new "Halligan Tool," but not New York City. Once again, folklore has it, that the city administration believed that since Chief Halligan worked for them (he was a deputy chief at the time) he should not be selling his tools to them at a profit…Chief Halligan felt otherwise. Not only would he not sell his tool to New York City, but also he had his design patented to protect his interest. He would however, sell the tool to individual firefighters or units, but not to the City of New York.

In 1963 I purchased a Halligan Tool directly from Chief Halligan with monies collected from members of my company. At the same time, I bought a Halligan Hook, another of his patented tools, which we could not requisition through the Fire Department at the time. As the fire duty increased, so did the demand for more tools. By the time Chief Halligan's patent had run out, similar tools in design began to appear. As expected, the City began purchasing and issuing these tools to units. Ironically, individual units still continued to buy their own Halligan Tools from anyone who would sell them.

During New York City's busiest times (mid 60's to mid 70's), not only did the fire duty exceed all expectations, but also security measures took on a new meaning. Private homes became as secure as banks. With a variety of alarms systems, security gates and an unbelievable assortment of lock and locking devices, forcible entry became an art as well as a skill. Through it all the Halligan Tool stood up. More and more units relied on this tool to overcome the daily challenges.

Original Halligan Tools are no longer produced. The tools that have followed Chief Halligan's design were at first not as good, but today they have improved on the original design and have made a better tool. Today there are small hydraulic assisted tools used to gain entry. Unfortunately, these devices are mechanical and mechanical tools break down. The firefighter must always know how to use the basic forcible entry tools, the axe and the Halligan Tool, to gain entry.

As stated earlier, firefighters are a unique breed of people. Given a challenge, they will adapt, modify and do whatever it takes to overcome an obstacle. However, it is Hugh Halligan's design that is the benchmark of the forcible entry tool. Chief Halligan passed away in 1987, but his legacy will live on forever in the "Halligan Tool."

From the tools available, to the types of doors they will encounter and the assortment of locks they will have to overcome, we the authors, have tried to give the firefighter a comprehensive look at forcible entry based on over 100 years experience.

John T. Vigiano
Captain FDNY (Retired)
1962-1998

Section 2

The Beginning

THE BEGINNING

In the fire service, the term **"forcible entry"** is defined as the act of gaining entry into a building or occupancy via a door, window or even through a wall**, by the use of force.** Back through the years, the fire service has been charged with this responsibility of gaining entry into secured buildings and occupancies.

Forcible entry has always been a primary goal of the fire service. Over the years, the types of tools used for this purpose have evolved quite a bit. How many people out there can recall a "Callahan" door opener, the Buster Bar, Hale, Detroit or Pirsch door openers; the past generations of the current Rabbit Tool, or Hydra-Ram?

All of these tools had their place in the fire service. Technology and the imagination of skilled people designed lighter and more versatile tools. But the heart and soul of forcible entry usually comes down to two firefighters gaining entry through a door with a **"Set of Irons."**

The Claw Tool

Where did this term "irons" originate? According to Hugh Halligan, the man who invented the Halligan Tool, many years ago firefighters responded to a fire in a bank. The fire was started to cover a burglary. In their haste to leave with the money, the thieves left behind a tool used to gain entry into the bank. This tool was a heavy length of steel with a fork on one end and a claw on the other end. The firefighters who extinguished the fire reasoned that any device efficient to break into a bank would be ideal for fire fighting. The firefighters adopted it as their own forcible entry tool. Many believe this was the first tool specifically designed for forcible entry.

The Kelly Tool

Whether or not the story is true, the Claw Tool was used by the fire service for many years. Over the years, other tools were introduced to the fire service. Many were excellent, but were limited in their application. Then along came the Kelly Tool which received its name from the inventor, Captain John F. Kelly of H&L 163 (FDNY). His tool had a chisel at one end and an adz at the opposite end. The advantage of this tool over the Claw Tool was the striking area, which was in direct line with the bar. This tool was also known as the "Lock Breaker." It was designed as an alternate forcible entry tool to the Claw Tool.

The "Irons"

The Claw Tool was still very popular with firefighters, especially its hook feature which gave quite a bit of leverage for forcing padlocks and scuttles. The Kelly Tool found its place by offering the straight drive of the adz and chisel. Together these tools could force just about any door or locking device. As the years went by, these tools became known as the "Irons" and were carried by the firefighter charged with the responsibility of forcible entry. Since they were usually carried connected by a short length of rope (hose strap) and hung over the shoulder of the member carrying them, he became known as the "Irons Man."

The Halligan Tool

Since these tools were quite heavy and unwieldy, the tools often "mastered the man." A lighter but equally efficient tool was needed. Along came Chief Hugh Halligan, FDNY, who took the design features of both tools and incorporated them into one hand tool. This tool had three driving heads. It was light (8 ¼ pounds) and incorporated the fork at one end and the adz and a slightly curved pike (instead of the claw) at the other end.

Chief Hugh Halligan With, The "HALLIGAN TOOL"

The Ziamatic Tool

In the early sixties, fire duty began to increase in New York City. At that time, the only tools the FDNY was issuing to its units were the Claw and Kelly Tools. (Folklore has it that Chief Halligan would not sell his tool to New York City.) Today we have many variations to the Halligan Tool. Some are even better than the original.

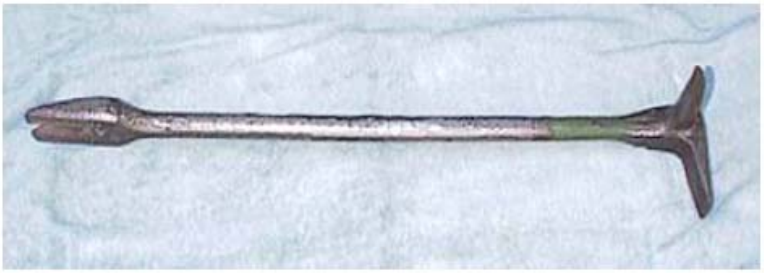

Some manufacturers took this good tool and made it better, others just copied the original design. One such company, the **Ziamatic Tool Company** began reproducing a similar tool. This was one of the many variations to the original Halligan Tool. It was quickly purchased by the New York City Fire Department to augment their limited supply of forcible entry tools.

The Pro-Bar

This tool has quickly become the FDNY's primary forcible entry tool. Many young firefighters consider this "the Halligan Tool," but it is just one of many copies of the original design.

This particular tool was also the brainchild of former New York City firefighters. They took the original tool and combined the better features of the Claw and Kelly into a better designed tool; hence the "Pro-Bar."

Comparing the "Original" with the "Pro-Bar"

The original Halligan Tool was unique to forcible entry. Combining many tools into one compact, hand tool took a keen mind. Chief Halligan did indeed make a revolutionary tool. However, there were some shortcomings with the original design.

The blunt fork and short narrow adz may have been effective in the early years, but due to new security technology, the original tool became inefficient. A simple modification to the original design proved to be quite effective. To this day, the modifications produced have proven to be most effective for a hand tool.

The fire service had been challenged to find other methods of gaining entry. At times it may require a different technique, more skill and stronger tools to accomplish this. This manual will attempt to:

- Outline principles, methods and techniques that will insure the effective use of forcible entry in training and in fire operations.
- Promote uniformity in training.
- Provide a handbook for the teaching and learning of forcible entry.

Section 3

Responsibility

RESPONSIBILITY

It is important to understand that for search, rescue and fire attack cant be achieved until entry is made. Ladder companies are most often given the assignment of forcible entry, assisting engine companies to make entry. Ladder companies can successfully obtain forcible entry and forcible exit with a wide variety of tools and techniques. Some techniques are basic and others are more difficult, but all are achievable with proper training and proficiency.

Proficiency
Firefighters need to be proficient in the basic entry skills.

- Fast Entry. Most firefighters start at the front door or main entrance of the structure. Entry, and often forced entry, must be achieved before an interior search, rescue, and firefight can occur.
- Reduce damage. Techniques to force entry on a door need to match the urgency to gain entry. There is no need to destroy a perfectly good door for a situation that is not a true emergency. With training and techniques, we can rapidly force a door with minimal damage.
- Professionalism. Pride in our work will be a direct reflection of the City in which we work it. Leaving a door in still condition of which it still functions enables us to secure it after the fire, preventing the chance of vandalism.

Jimmying
The technique of "jimmying" a door (spreading the door away from the jamb without damaging the lock) can seldom be accomplished with today's building construction. Doors are now constructed with stronger doors and jambs as well as multiple locks on each door.

The primary motivations for forcible entry should be firefighter safety in both forcible entry and forcible exit, followed by customer service. The firefighter needs to be skilled, and knowledgeable in techniques and equipment to obtain forcible entry both rapidly and efficiently.

For non-emergency situations such as slow water leaks, fire alarm indication with no visible signs of fire, etc, consider forcible entry techniques in gaining entry. In many instances, firefighters can gain entry through a window or a thru-the-lock method of entry. Also consider what will be done to secure the house after the incident is done.

In order to become proficient at the skill of forcible entry, the firefighter should have a mixture of:

Hands on training– this is the primary way firefighters learn and keep their skills sharp.

Experience– actual calls where forcible entry is used..

Knowledge– may be gained by experience, reading, classes, and sharing experience within the Ladder Committee to exchange information and ideas.

Common sense– trust your instincts, they are usually correct.

Size-up

Size-up begins with the call and does not stop until the fire is under control and all firefighters are safely exited the structure. Size-up with regards to forcible entry is the ongoing evaluation of the problems confronted with the fire situation. It needs be continually be evaluated and re-evaluated. It is imperative that ladder companies assigned to forcible entry also consider forcible EXIT in case interior crews need to bail out of the structure quickly.

When sizing up the structure, firefighters must consider the reason for entry. The tactical objective and severity of the incident must be considered. The goals are to save lives, extinguish the fire, and stop further damage from an incident.

As firefighters get off the truck, the following questions should be considered:

- Where is the fire?
- How many floors are in the structure?
- What type of occupancy?
- What type of building?

In conducting a size-up, the following should be considered:

Occupancy– knowing the structures in your first due, both residentially and commercially, will help determine the types of doors and locks that may be encountered. It will also help assist in knowing if any specialized tools will be required.

Door– knowing the type of door and its components will assist in proper tool placement and method of entry. This includes:

1. Direction of door opening: most residential doors open into the occupancy and are considered "inward swinging doors," while most commercial structures the door opens out of the occupancy and are considered "outward swinging doors."

2. Door frame: the structural member into which the door is hung. It may be made out of either wood or metal.

3. Hinges: There are many types of hinges used today. The types most commonly found which will be discussed in this chapter are (a) standard, (b) self-closing, and (c) pin type.

4. Replacement door: a new pre-hung door and jamb that has been placed into an existing door frame.

Locks– to determine the degree of difficulty in forcible entry, a working knowledge of the various types of locks, as well as a basic understanding of how they operate and are installed. The number of locks and where they are placed on the door should also be determined.

The easiest type of door to make entry on is one that is already unlocked, always remember to **TRY BEFORE YOU PRY!**

Section 4

Tools

The success of any job resides in the knowledge of the tools and their correct application. Listed here, within categories, are many of the tools used in forcible entry:

Conventional Tools

- Axe (6 and 8 pound)
- Halligan Tool
- Maul (10 pound)
- Halligan Hook (steel shaft)

Thru-the-Lock Tools

- K-Tool and Key Tools
- Lock Puller (Officer's Tool)
- Shove Tool
- Vice Grips (may be used for Padlocks, Thru-the-Lock)

Hydraulic Tools

- Hydra-Ram
- Rabbit Tool

External Lock Tools

- Bam-Bam Tool
- Duckbill Lock Breaker
- Bolt Cutter
- Pipe Wrench with Cheater Bar

Power Tools

- Power Saw
- Cordless Drill/Cordless Sawzall

Specialty Tools (Limited use)

- Torch
- Battering Ram
- Vice Grips (may be used for Padlocks, Thru-the-Lock)

Modified Tools – Standard tools/devices that have been modified for use in the fire service.

- Channel Lock Pliers
- Key Tools
- Padlock Tool
- 8-Pound Axe

CONVENTIONAL FORCIBLE ENTRY TOOLS

Axe (6 & 8 pound): A FLAT HEAD axe should be used and a striking tool. Flat head axes are either 6 or 8 pounds, and the 6 pound axe can be easily married up to the Halligan tool for easy carrying. The 8 pound axe has a larger blade and may not fit into the Halligan tool unless it has been notched (section 16). Using an 8 pound axe will deliver more power to the object it is hitting. Axes should be "dressed" and the striking part of the axe should be filed and kept square. Avoid having the crown of the axe from mushrooming over.

The axe with the Halligan tool forms a set of "irons" which are the basic forcible entry tools. The axe can also be used to:

"Chock" open a door.

Be a backstop for the Halligan of hydraulic tool.

Hold the purchase when repositioning the Halligan.

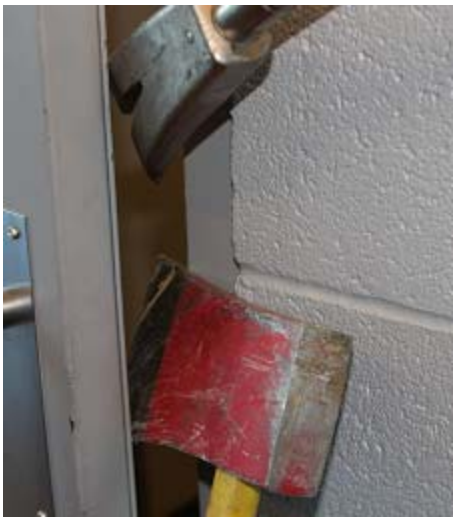

Halligan Tool: There are many different brands and styles of this popular tool. They are most commonly 30” in length, with a beveled fork, tapered adz and pike.

Notch in Axe Blade: An 8 pound axe head may be notched so that the Halligan tool may be married to it.

Maintenance of the Irons

Proper maintenance of tools and equipment is the first stop in tool safety. Tools should always be inspected and cleaned an a regular basis. Tools and equipment must be checked for wear and damaged, and if any is found, be removed from service until it is repaired or replaced. Proper care of forcible entry tools with increase their service life and reliability.

Metal Parts

- Remove any dirt or ruse with steel wool or an emery cloth.
- Use a metal file to maintain the proper profile and cutting edge.
- Sharpen edges and remove and burrs with a file.
- Do not keep the blade edge to sharp to prevent it from chipping.
- Do not use a grinder on the blade, it may overheat the metal causing it to lose the temper.
- Do not paint the metal parts, but keep them lightly oiled if desired.
- Never apply oil to the striking surface of the axe or Halligan.
- Dress the edges to keep them square and free of burrs which may splinter off when being struck.

Wood & Fiberglass Handles

- Clean with soap and water; rise and dry completely.
- Check for damage and sand off any splinters.
- Do not paint or varnish the handle. A small band of paint may be used for tool identification.
- Ensure that the head of the tool is securely fastened.

Sledge Hammer: This tool comes in a variety of sizes, but the most common and versatile is the 10 pound model. This striking tool may be used in place of the axe to form the set of "irons." It may also be used to strike directly on the door or to remove cinder block as well as many other building materials.

THRU-THE-LOCK TOOLS

K-Tool: This tool was developed for pulling a lock cylinder (thru-the-lock entry) on a door. It is used with an axe/sledge and Halligan tool.

The K-Tool is forced behind the ring and face of the cylinder until the wedging blades take a bite into the cylinder body. Light strikes with the axe are used to set the K-Tool.

The Halligan tools adz end is place into the slot on the face of the K-Tool and pride upwards, pulling the cylinder from the door.

The Officers Tool/A-Tool: The Officers Tool/A-tool is placed forked end over the cylinder and lightly struck with an axe. Once the forks are behind the cylinder, the tool is moved upward and the cylinder is pulled.

Shove Tool: This tool is made out of a flexible, 10 gauge sheet steel. The device is slid between the door and the doorframe above the spring latch. Once the "hook" end catch the latch, the tool is pulled toward the firefighter, which then depresses the spring latch opening the door. This tool will only work on outward swinging doors.

Vice Grips: These locking pliers can be used to "unscrew" a mortise cylinder from the lock housing or to simply hold a lock while it is being cut with a circular saw. A short chain may also be attach to the end, with the vice grips attached to a door handle. During a forcible entry operation, the firefighter can keep control of the door even after it has been forced open.

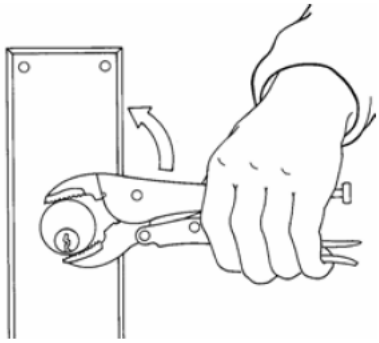

HYDRAULIC TOOLS

These tools are used for forcing inward swinging doors. They work best on doors mounted on metal frames and have also been used to force the sliding doors found on elevators. More information will be covered in Section 9: Hydraulic Forcible Entry Tools.

Rabbit Tool: This is a portable, two-piece unit that is connected by a high-pressure hose. The large jaw will spread force over a greater area. In exerts more than four tons of force with a jaw spread over approximately 6 inches. The pump is designed to be operated in the horizontal position, but may be used vertically if the hose is facing downward.

Hydra-Ram: This is a one-piece unit similar to the Rabbit Tool. The maximum force exerts over five tons over a spread of approximately 4 inches.

EXTERNAL LOCK TOOLS

Bam-Bam Tool: Also known as a “slap hammer” or “dent puller,” this tool was primarily used to auto body shops to pull dents out of automobiles. This is a successful took is pulling lock cylinders from padlocks. It requires a good quality self-tapping screw. More on the tool will be covered in Section 13: Padlocks.

Duckbill Lock Breaker: This tool was derived from the pick-axe and modified to be used solely for forcible entry. It is used to drive the body of the padlock off of the shackle. The tapered head is placed into the shackle of the padlock and driven down with a flat head axe or sledge hammer.

Bolt Cutters: These tools can be used for cutting hasps, light-duty padlocks and chains. It is limited to the spread of the blade and is not recommended for cutting case hardened shackles as it may damage the blades. If possible, cut the staple holding the padlock, if you have to cut the padlock, cut both sides of the shackle.

Pipe Wrench and Cheater Bar: This is a large pipe wrench with the ability to slide a cheater bar over the handle for added leverage. Adding the cheater bar drastically increase the torque that is applied to the locking device.

POWER TOOLS

Circular Saw/K-12: The power saw improves forcible entry efficiency by facilitating cutting operations at fires, especially when roll-down doors and security gates are present. These saws come in a variety of models and require a metal cutting blade when cutting padlocks and/or roll -down security doors. More will be covered in Section 14: Roll-Down Security Gates.

Cordless Drill: This drill operates off of a battery. It may be used as a method of thru-the-lock entry causing minimal damage to the door.

Reciprocating Saw: This saw operates off of a battery. It is a versatile tool good for removing gates and bars, and is also very useful in vehicle extrication.

SPECIALTY TOOLS (Squads)

Cutting Torch: Squads utilize Petrogen, a mix of gasoline and oxygen, that are utilized for cutting metal and iron. Cutting torches may be used to cut gates, locks, and other metal locking devices.

MODIFIED TOOLS

Modified tools are standard tools and/or devices that have been modified for use in the fire service. Shown are the most common types out in the field.

Channel Lock Pliers: modified commercial Channel Locks into two Key Tools for the Rim and Mortise type locks.

Key Tools: Eyebolts and standard 10-Penny nails modified as Key Tools.

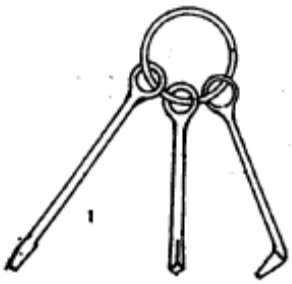

Eyebolts

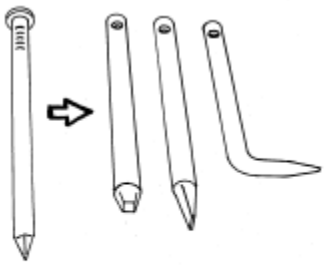

10-Penny Nails

Section 5

Types of Locks

TYPES OF LOCKS

Key-in-the-Knob Lock: The locking mechanism is part of the knob. These doors are mostly found residentially, but may also be used in commercial building, especially on internal doors.

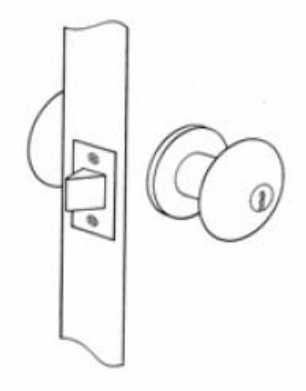

Tubular Dead Bolt: This is the most common locking device found in homes. It may be single or double key activated. It is a cross between the mortise lock, rim lock, and key-in-the-knob lock.

Rim Locks: These locks are usually installed as an added lock. They are installed on the inside surface of the door (with the cylinder extended through the door.) Only the cylinder is visible from the outside of the door. The types of rim locks are; deadbolt, night latch, and vertical dead bolts.

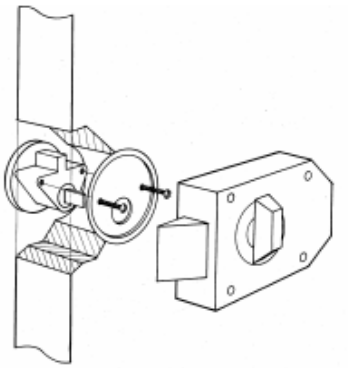

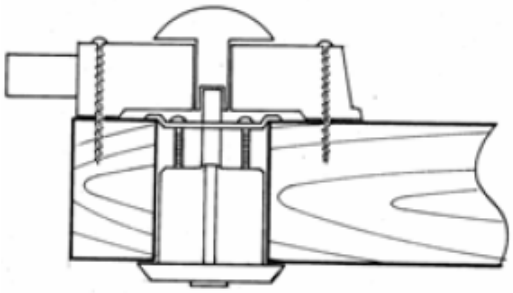

<u>Deadbolt</u>– unlike a spring latch, this device must be manually thrown to engage the bolt into the keeper. With the bolt extended, this lock can not be engaged by slamming the door.

<u>Night Latch</u>- the latch is beveled to allow the door to be slammed shut. Some of these spring latches have an inside button to prevent the latch from returning within the lock to prevent sliding open.

<u>Vertical Dead Bolt</u>– this rim lock has a bolt which drops down and through the keeper. This device must also be manually engaged and has a “jimmy” proof lock.

Mortise Locks: These locks are designed and manufactured to fit into a cavity in the edge of either a metal or solid wood door. They have a solid, threaded key cylinder, which is secured in place by set screws. The two most common types are; mortise/latch key and mortise/door know.

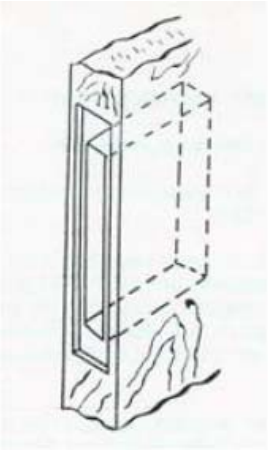

Dead Bolt and Latch: This commonly used lock today contains both a latch and a bolt in a single unit. It is distinguishable by the proximity of the lock cylinder to the door knob.

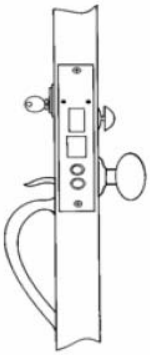

Mortise/Latch Key

Deadbolt and Latch

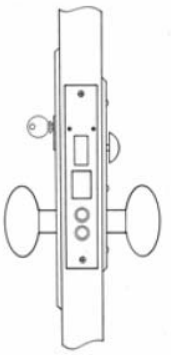

Mortise/Door Knob

Magnetic Lock: A magnetic strip holds the door secure. Found mostly in commercial buildings and city facilities. These doors are opened up with a key card. <u>Placing a common nail across the magnetic strip will prevent the door from relocking behind firefighters that have made entry.</u>

Section 6

Types of Doors

TYPES OF DOORS

Wood and Glass Panel Door: This type of door is found in older buildings. It provided light to the public hall in multiple dwellings. The original plain glass panels were changed to wire glass. Some wood and glass doors may contain plate glass. The glass has significant weight to it, and when broken, can cause serious injuries.

Wood Door: There are two types of wood doors; Hollow Core and Solid Core.

Hollow Core: These doors are made up of an assembly of wood strips or cardboard that are formed into a grid. These strips are glued together within the frame forming a stiff and strong core. Over this framework and grid are layers of plywood veneer paneling.

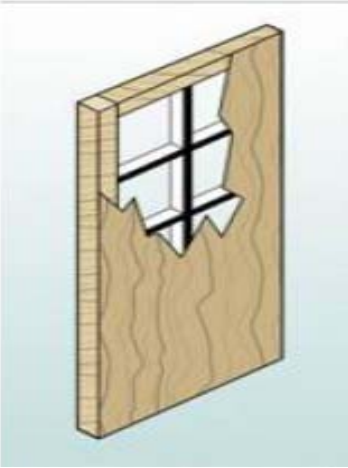

Solid Core: In these doors, the entire core is constructed of solid material, such as tongue and groove boards that are glued within the frame. Other solid core doors may be filled with a compressed material that is fire retardant. In both cases, the door is side with a plywood veneer covering.

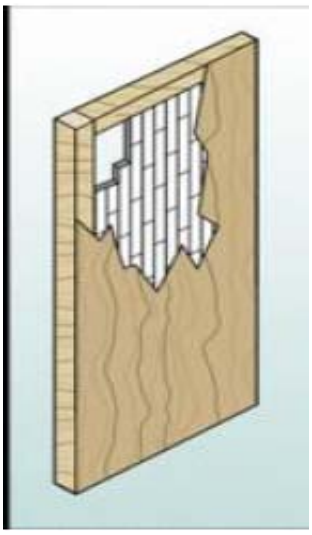

Kalamein Door: In older buildings, a main problem with multiple dwelling structures was the "burn through" time with wood doors. To overcome this problem and increase the "burn through" time, these wood doors were covered with metal and known as "Kalamein Doors."

Metal Door: Constructed of metal, these doors are usually set in hollow or metal doorframes. When set in a metal door frame and surrounded by masonry construction, they hold their form and hold back considerable fire. Metal doors are found most commonly in a commercial structure.

Multi-Lock Door: One of the most advanced locking systems that utilizes a key a multiple bolts and keepers. Built into the door are four rods, which extend out from the keyway toward all four edge of the door. The throw of each rod is approximately 1” into the frame. It is designed to prevent any rod from moving separately. Originally built as a deterrent against terrorism, it is used today in occupancies where security is important. <u>From the exterior, this door can be identified by the keyway in the center of the door.</u>

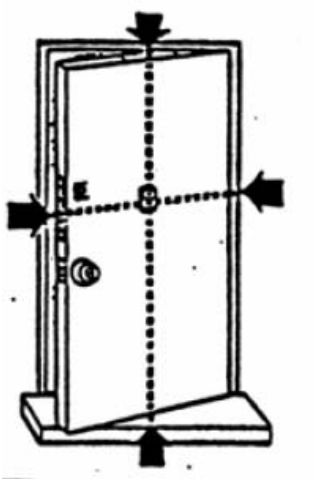

Multi-Lock Door (add-on): With the popularity of the multi-lock door came the less expensive version which is mounted on the inside surface of the door. Similar to the Rim lock, attached to the inside of the door are four bars, which extend out from the keyway toward all four edges of the door. The throw of each bar is approximately 1” into the frame or keeper. It is designed to prevent and rod from moving separately. When properly installed, it is as effective as the Multi-Lock Door.

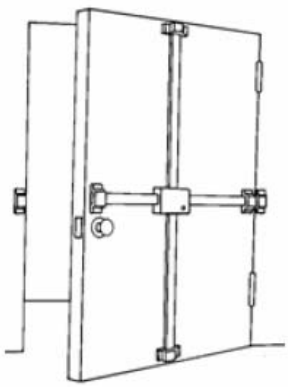

Tempered Glass Door: These doors are recognized by the lack of a full frame with little or no trim. The door handle is usually mounted through the glass and the lock may be installed in either the top of bottom stile. These doors are commonly referred to as a "Glass Door."

The breaking characteristics of tempered glass are different than ordinary plate glass due to the heat treatment give to the glass during tempering. This process results in high-tension stress in the center of the glass and high-tension compression stress in the exterior surfaces. These tension and compression stresses balance each other. The heat treatment also increases the strength and flexibility as well as the resistance to shock, pressure, and temperature increases.

Approximately four times stronger than plate glass, when broken, tempered glass disintegrates into relatively small pieces.

Aluminum Frame Glass Door: These are the most popular doors found in commercial occupancies. It is not uncommon to have the plate glass replaced with tempered glass, lexon, or plexi-glass.

Replacement Door: A relatively new door application where the existing doorframe is covered with a pre-hung steel door and a new metal pre-assembled doorframe is attached to it. This replacement assembly is screwed into the old frame. It is to recognize a replacement door and the forcible entry tools must be placed between the new doorframe and the door, NOT between the old doorframe and the replacement doorframe. The door with the frame is laid in over the existing frame.

Replacement Door

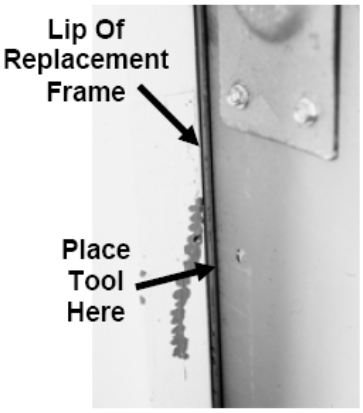

Lip of Replacement Frame

Replacement Door Frame

Sliding Doors: These doors are most often found leading to the backyard of a residence. These doors may travel either left or right of their opening. They are supported on a metal track and their side movement is made easier by guide wheels. A bar is sometime laid into the track to prevent breaking in.

Pocket Doors: These doors are found interior and slide into a partition or wall when pushed open. These doors may be forced similar to a swing door, except that they must be pried straight backward from the lock. The pockets for these doors create a hidden space for fires.

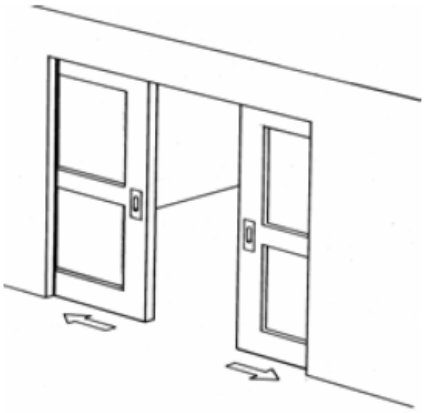

Section 7

Additional Security Devices

ADDITIONAL SECURITY DEVICES

Sliding Bolt: A device that travels in a track which locks into a recessed hole or hardware. Padlock may pass through the rear of the bolt and make the bolt secure. These slide bolts may be made of case-hardened steel and are installed with screws or carriage bolts. These screws or carriage bolts may be exposed or guarded.

Static Bar: A fastening device that can be mounted across the door at any point. Generally they are in pair and held in place by brackets which may be fastened to the doorframe. These devices can be identified by the outside of the door by the four carriage bolts that hold the brackets.

Note: With the sliding bolt or static bar in place, firefighters will know that occupants did not exit through that door. There is either another means of egress or the occupants are still inside of the structure.

Angle Iron: A device secured to the door and occasionally the doorframe. It can be found on both inward and outward swinging doors. It may be partial length or run the full vertical length of the door. It represents another form of security that is added on by the owner.

Shielded Angle Iron: A device that is mounted to both the door and frame and interlocks on itself. It many be partial length or fun the full length of the door. It is two separate pieces mounted, one to each surface. By adding this inter-locking piece of angle iron, additional security is added to the occupancy.

Note: The arrow points out a lock cylinder located near the bottom of the door. This simple set-up pre-vents most “push-in” forcible entries.

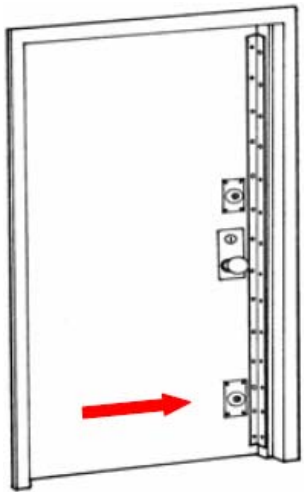

Cylinder Guards: A raised rectangular metal plate over the lock cylinder that is held in place with four carriage bolts. These bolts may be exposed or hidden in the body of the guard.

Black

Heavy Duty

Brass

Home Made Locking Devices: A method of securing a door is a modification called the "chain lock." In this application, the occupant bolts a length of heavy chain to the inside of the door. Generally, the carriage bolt and washer are secured within one foot from the edge of the door and one foot above the door knob. The other piece of chain is attached to the door frame. A padlock adjoins the two pieces of chain.

This application is sometimes overlooked due to the presence of a single carriage bolt in an obscure location of the door. If a single carriage bolt is noticed in the door, suspect a chain like and cut/drive the bolt through the door BEFORE forcing the door. This can be done with the pike of the Halligan or sharp blows with the axe or sledge hammer. If the bolt on this door is missed, entry may be delayed.

If the bolt is missed and the door is forced open, lock the fork of the Halligan around the chain at the frame side and attempt to pull it out of the frame. While doing this, maintain pressure on the door in the open position.

If accessible, cut the chain with the circular saw.

If fire comes out of the door, shut the door until a charge hose line is in place and continue the operation.

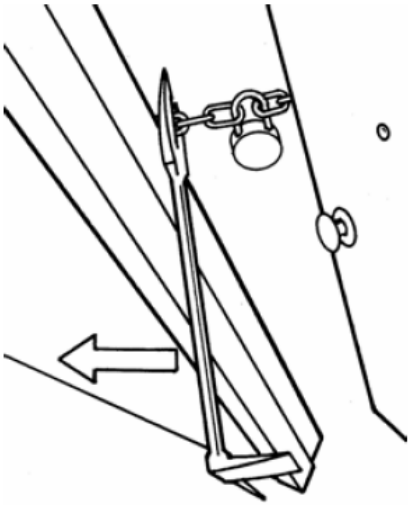

Lock Box: This method of security not only protects the property, but limits the damage to many locks and doors. It is required by most cities in the Valley on commercial occupancies, and may also be found in residence of the elderly that frequently need assistance from the fire department.

Only the local fire departments carry a master key which cannot be duplicated. When responding to a call, opening the lock box and obtaining a key is usually the quickest and most effective way to gain entry to a structure, while maintaining a high level of customer service.

Section 8

Conventional Forcible Entry

CONVENTIONAL FORCIBLE ENTRY

Definition

Conventional Forcible Entry is the oldest and most versatile method of entry. Usually made of a two-man team, using a flat head axe or sledge hammer and a Halligan tool. It requires skill and technique to master and at times may have to be accomplished by one person. When forcible entry is required, it should be started immediately. A door should be forced in such a manner as to preserve its integrity. Once a firefighter has mastered the skill of using their irons, most doors, even those that are well secured, can be forced quickly. Forcible entry is a matter of technique and leverage.

Entry Size-Up
The fire ground is a stressful place to work in, especially for first due units trying to complete an array of tasks. Among the most important tasks is gaining rapid entry into the structure. This can only be accomplished by rapid and accurate entry size-up.

Prior to forcing a door, the forcible entry team should

- TRY THE DOOR, it may be unlocked.
- Take note of the door and locking devices involved.
- Note the condition behind the door (any smoke, fire, heat).
- Check for resistance on the door; push in at the top, center and bottom. This may help determine where locking devices are located.

To master this skill, a firefighter should have a basic knowledge of the types of doors and security of which they will encounter, in addition to the skill gained through hands-on experience. Also, the firefighters must have the confidence in their skills that will allow them to work through any situation under extreme pressure.

Steps to Forcing a Door
Most conventional forcible entry involves several moves in order to accomplish the goal. In order to make it understandable, the conventional forcible entry method has been broken down it to three separate steps. Each step may have additional maneuvers, but once the firefighter understands the basic principles, it is easy to follow and move quickly through the steps.

The recommended steps for force a door are:

- **GAP**
- **SET**
- **FORCE**

Steps for Forcing Inward Swinging Doors

1. **GAP the door–** this step will make an opening in the door and/or frame to create a purchase point. It may also force open a poorly secured door.
    - Work the ADZ end into the stop of the doorframe approximately 6" above or below the lock. The tool can be set into the frame with a baseball type swing and driving the ADZ end into the frame.
    - If there are 2 locks close together, go between them (unless they are stacked locks)

Note: The reason for the 6" rule is to avoid the Halligan from striking the lock. The fork of the Halligan is about 3" wide and most lock bodies are also 3" wide.

Technique Tip: You will lose power when pushing down of the pick hits the door, you will increase power by move the tool up.

2. **Set the tool–** This step requires the most skill. This involves working the fork of the Halligan tool into the gap to spread the door away from the frame. The Halligan tool is considered "SET" when the fork is "locked in" to the inside of the doorframe.
    - Position the Halligan tool fork approximately 6" above or below the lock cylinder. If the tool is too close, the fork may hit the lock and will not be able to "lock in" the frame. If the fork is too far away, the door may flex and the lock will not fail.
    - Place the fork of the Halligan tool (bevel to the door) and angle the Halligan to work around the doorstop. This is considered the ideal position since it produces the most spread of the door and frame and puts the most stress on the locking device. It is important that the firefighter using the Halligan to "walk the tool" around the doorstop and frame.
    - This method give a greater range of motion to the Halligan tool since the adz end will be facing away from the door and not strike the door while forcing it.
    - It also offers a better striking position for another firefighter to hit with an axe or sledge hammer.

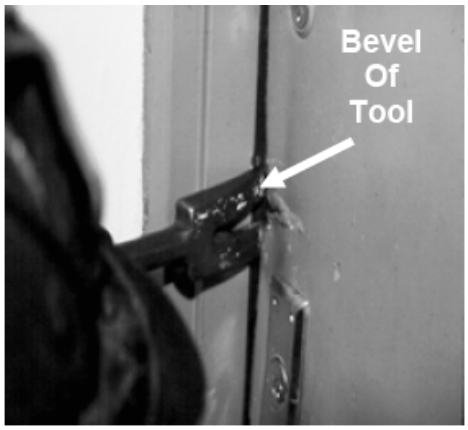

Note: When there are multiple locks closely spaced on the door (stacked locks), position the tool above the upper lock or below the lower lock. The 6" rule is a general rules and should allow the fork to clear the inside of the lock.

- The forcible entry firefighter should be between the door and the tool. Generally, the forcible entry firefighter should have their should in contact with the door. This position gives a good view of the area where the tool is being driven in and also gives a full range of motion for the tool as it is pushed away from the door as it is being driven in.
- The forcible entry firefighter should keep his eyes on the FORK end of the Halligan tool where it is being driven into the GAP.
- <u>Keep moving the Halligan tool away from the door as it is being driven in (struck)</u>.

Set the Tool

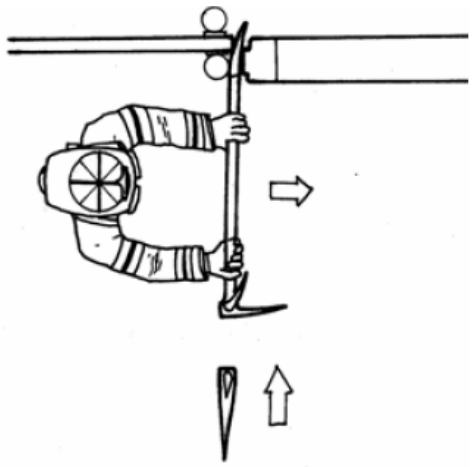

Technique Tip: As soon as the tip of the fork is past the edge of the door, sharply push the tool away from the door. "Spring" the door away from the frame and maintain pressure on the tool to prevent the tips from striking the frame.

- When the Halligan is nearly perpendicular to the door, drive it in forcefully. The FORK end of the tool is driven past the inside of the frame. This will ensure the tool being "locked" into the position and not slipping when pressure is applied.
- The tool is SET when the ARCH of the FORK is even with the inside of edge of the door/doorstop.

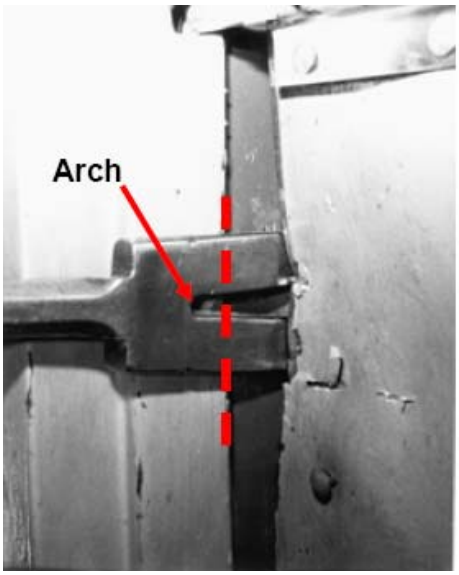

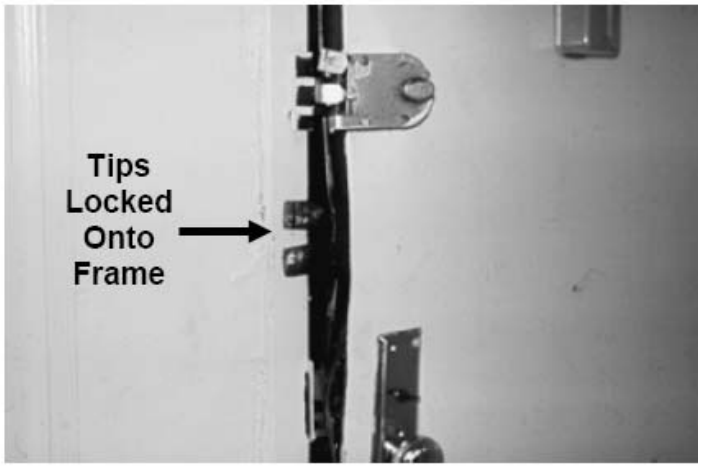

Striking the Halligan Tool
Coordination and communication must be maintained between the members of the forcible entry team.

- The firefighter holding the Halligan tool controls the operation.
- The firefighter with the axe/sledge strikes the Halligan PERPENDICULAR to the ADZ.
- The firefighter with the axe/sledge may have to stand, crouch, or kneel to obtain the best position.
- The firefighter with the axe/sledge only strikes when told.
- The commands “HIT” and “STOP” must be understood.

To Maintain Control

- Short chopping blows.
- Perpendicular to the adz end.
- In-line with the shaft.

Note: As the tool is SET, more powerful strikes may be delivered.

3. FORCE

When the Halligan is set, force is applied to the tool creating leverage against the door.

- The forcible entry member change position to face the door. This gives them a better position to apply pressure.
- Ensure everyone is ready.
- The other firefighter of the team should try to control the sudden opening of the door by holding onto the doorknob or attaching a tether to the knob.

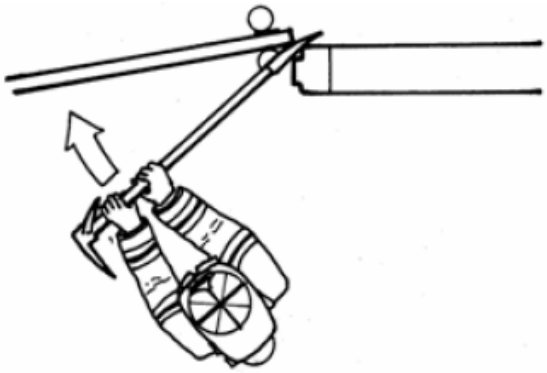

- Push in sharply to create maximum force.
- If strong resistance is met, a second firefighter may be used to assist.
- As the door opens, the second firefighter MUST MAINTAIN CONTROL OF THE DOOR.

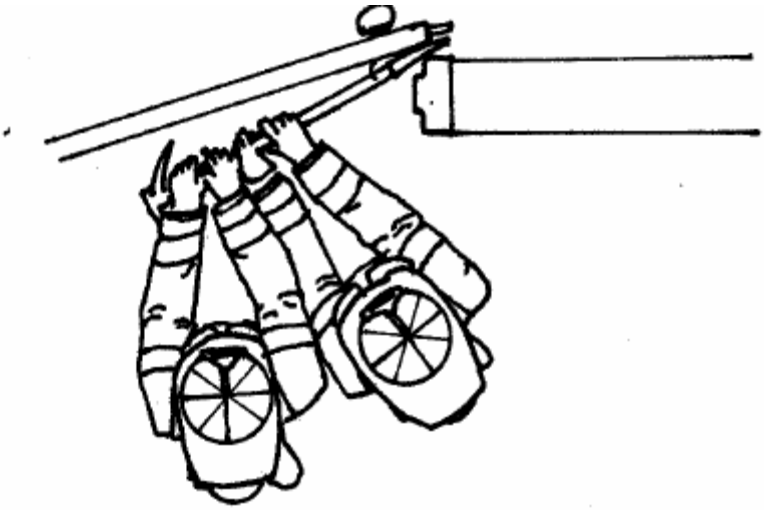

Note: In the above method, as the door is flexed from pressure, note the presence of fire behind the door. If fire is present, make sure there is a charged hose line in place to protect the forcible entry team.

ALTERNATE METHODS TO GAP AN INWARD SWINGING DOOR

Pike or Adz into the Frame

Driving the PIKE or ADZ into the doorframe with either the axe or sledgehammer, or simply by taking a baseball swing, should give the tool enough bite to ensure a purchase. Try to bury the PIKE into the frame as close to the door and lock as possible. This procedure is very quick and simple for a one-man operation. This procedure may even force the door open. It works best on wooden doors with wooden frames.

- Place the PIKE between the door and the doorstop, on or near the lock.
- Drive (set) the pike with the axe.
- Push down or pull into the door (gap) with the Halligan tool.

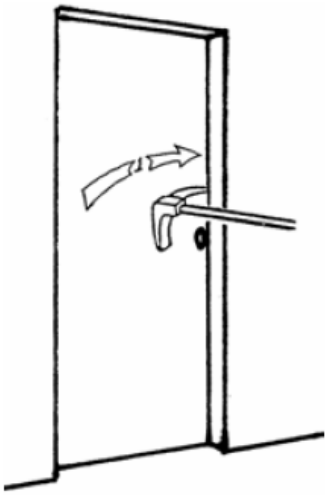

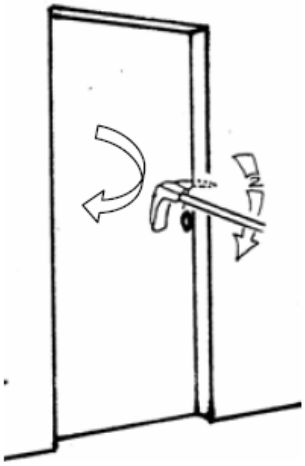

Bevel to the Frame

- Place the BEVEL of the Halligan tool against the frame and with the axe or sledge, drive the fork end in.

  This is usually done when there is a very tight door with stiff resistance:

  -Usually a metal door with a metal frame.
  -An obstruction is in the way making it difficult to strike the tool.

As the tool is driven in, it must not be driven into the frame. This will take a "feel" of the tool to do so correctly.

Note: This method does not give full range of motion to the tool. The adz will strike the door as the firefighter pushes towards the door.

Batter the Door

A few sharp blows with the Halligan tool, axe, or sledge may loosen the door enough to slip the adz end in. When doing this method, the firefighter must hit the "rail of the door" since it is the strongest area of the door. Striking the door in other areas many only weaken the door's integrity or knock out panels allowing smoke or fire furthering the difficulty of forcible entry.

Technique Tip: If the door is set in a weak frame, several sharp strikes to the door right on the lock may split the frame. This is especially true of the door has a mortise lock. The mortise lock is set into a cavity made in the door that may compromise the doors integrity.

Batter the Door Frame

Batter the door frame by striking it with an axe, sledge, or Halligan tool approximately 6” above or below the lock and driving it away from the door to allow entry of the Halligan tool. Occasionally steel framed are filled with concrete and may not crush.

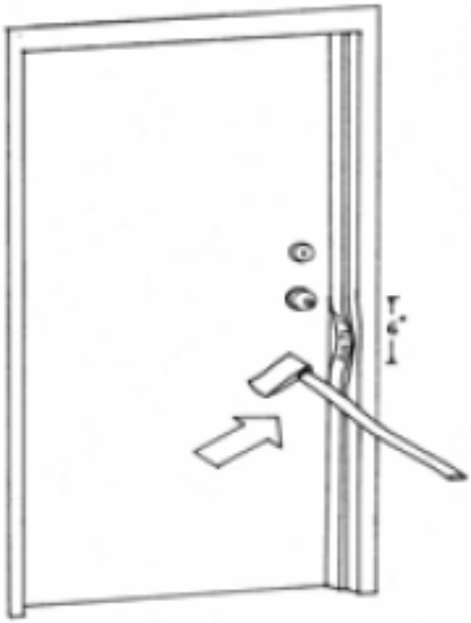

Remove the Doorstop

Remove the doorstop on wood and/or Kalamein doors with the adz or fork end of the Halligan tool. This is a simple way to open a door with minimal damage. This method works best on wood doors with wood frames.

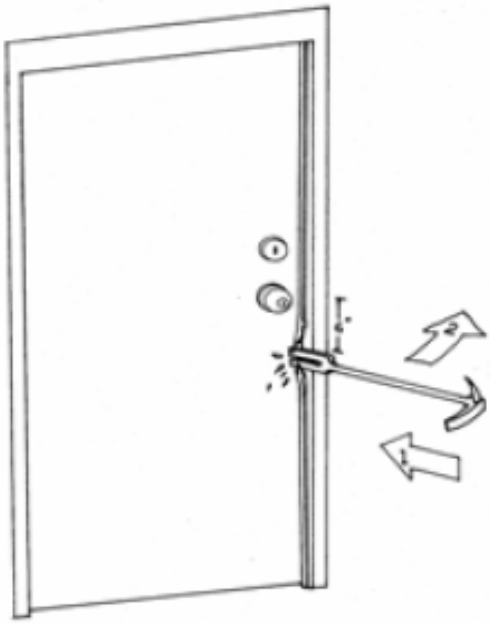

The Halligan Tool Gets Stuck

Problem: The fork is in contact with the doorframe.

Solution:
- Increase the angle away from the door.
- Rock the tool to free it.
- Re-gap the door; reverse the tool (bevel to frame)
- Move further away from the lock.

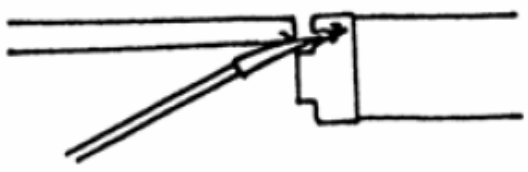

Contact With Doorframe

Increase Angle

Problem: The fork is hitting the bolt or lock.

Solution:
- Reposition the Halligan tool above or below the lock.

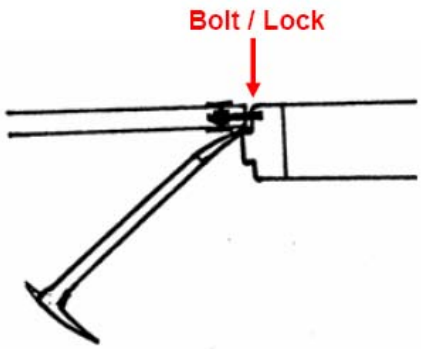

Striking Bolt / Lock

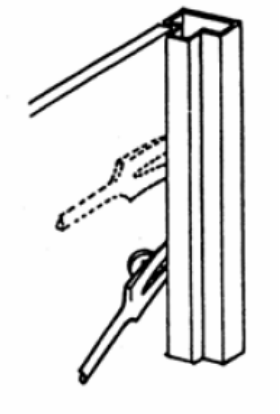

Reposition Halligan

The Halligan Tool Gets Stuck

Problem: The fork is wedged in a tight door.

Solution: Springing the door.

- Move the Halligan tool side to side to free up the tool.
- Push sharply and hold until the tool is driven further in.

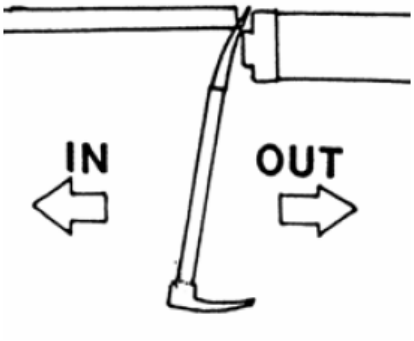

Springing The Door

Problem: The fork is wedged in a tight door.

Solution: Slipping the Lock.

- Move the Halligan up and down. This may allow the tool to slip past the bolt of the lock.

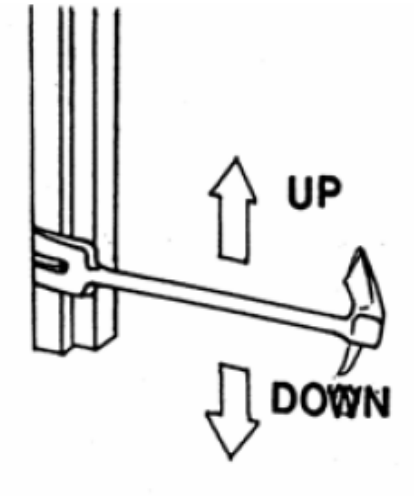

The Door Does Not Open During the Initial Operation

Problem: The door flexes and does not open.

Solution: Method A - Using the Adz

- Maintain the purchase point with the axe.
- Slip the adz inside and behind the doorframe.
- Both firefighters push and pull on the Halligan.
- If the doorframe collapses and the adz gets stuck between the door and the frame, use the axe to wedge open the space, then push or pull the Halligan away from the door to release the adz.

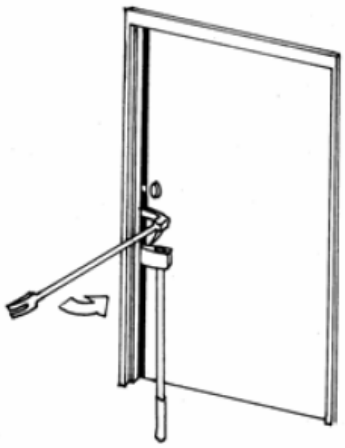

Front View

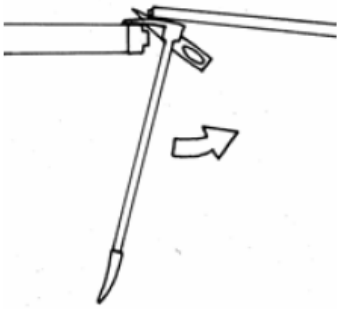

Top View

Note: This method greatly increases the range of motion of the Halligan tool and will break most locks.

Problem: The door flexes and does not open.

Solution: Method B - Using the Adz

- Extra push may be obtained by placing the head or blade of the axe between the Halligan and the door.
- Place either the blade or head of the axe into the door seam.
- Push in sharply with the Halligan.

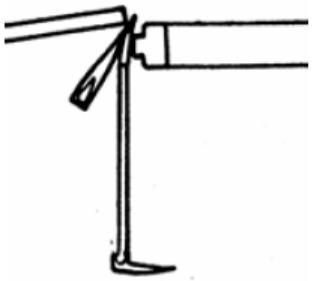

Blade Into Door Seam

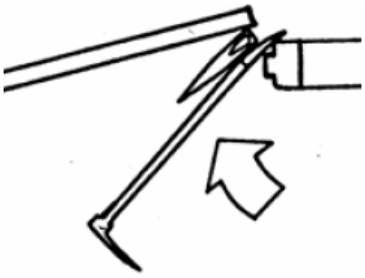

Head Into Door Seam

Problem: Door only opens partially due to strong locks.

Solution:

- Place the Halligan tool directly on the lock and drive it off the door. Driving the lock off the inside of the door takes sharp blows with the axe/sledge. Remember that you are trying to drive out the screws that hold the lock onto the door.

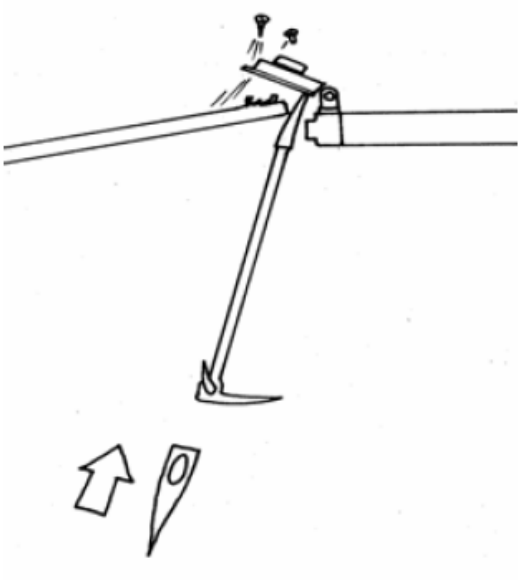

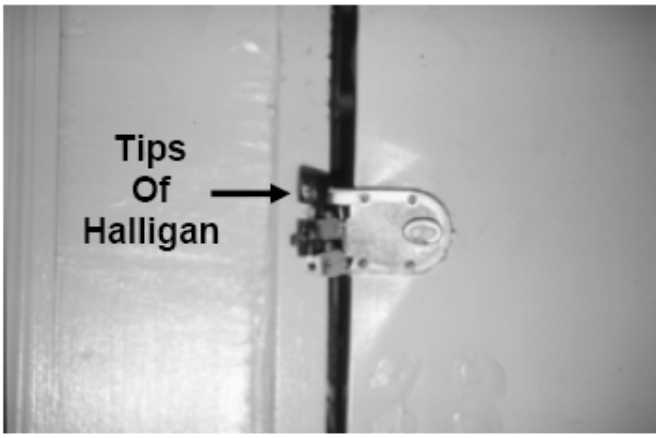

Note: If the firefighter can crush the door enough to see the locking device (especially the vertical deadbolt type), they may be able to shear off the striker with the Halligan tool.

Angle Iron Inward Opening Door

- Usually bolted to the door, may be partial or full length.
- The angle iron may be flat stock or shielded (interlocked with “J” channel.)
- Place the BEVEL towards the angle iron and the tool PERPENDICULAR to the door between the angle iron (shield) and the frame.
- Lock the tips of the fork into the doorstop and push in sharply, (GAP) the door with the fork between the angle iron and the frame.
- Reset the tool and drive in (SET).
- Using the angle iron under the tool, force the door open. (FORCE).

Forcing the “J-Chanel” Inward Opening Door

- A newer type of device that is screwed into the door frame.
- The technique is modified by driving the fork end of the Halligan between the shield and the door frame.
- Drive the fork un until the tips hit the door.
- Push the tool toward the door, popping the shield off of the frame and bending it out of the way.
- Re-set the tool and drive it in until it is set.
- Force the door.

Narrow Hallway or Recessed Door

When there is little room and/or limited visibility to swing an axe or sledge, an alternate method of striking the Halligan would be:

- Slide the head of the axe/sledge along the shaft of the Halligan tool and strike the shoulder of the fork end.
- Bevel to the frame may give better results due to easier entry and better angle to strike the tool.

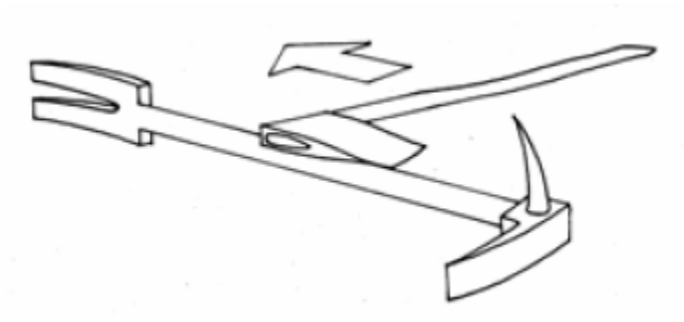

Note: The shoulder of the fork end must be squared off to strike it. To do this, see Section 16.

FORCING *OUTWARD* OPENING DOORS

Using the Adz End

- Place the ADZ between the door and the frame.
- GAP the door by rocking the tool up and down to spread the door from the frame.
- SET the tool, and pry the door out by pulling on the Halligan so the ADZ can be driven in. Be careful not to bury the tool into the doorstop (see Section 16).
- FORCE the door, set the ADZ end around the inside of the door.

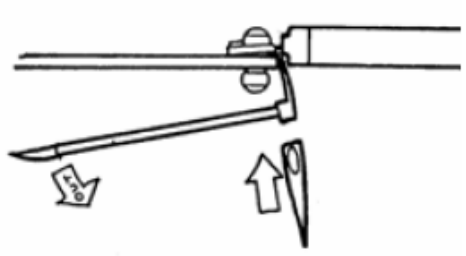

Gapping The Door (Top View)

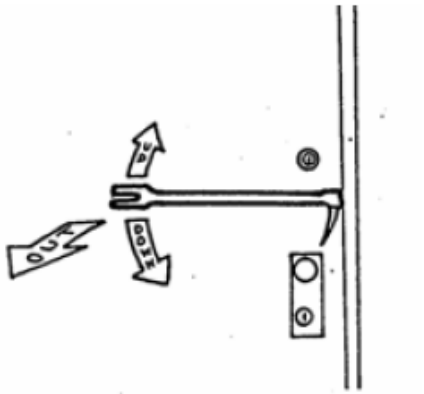

Gapping The Door (Front View)

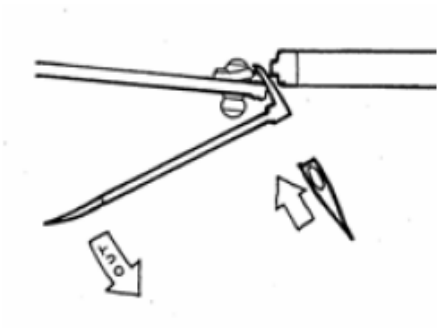

Set The Tool (Top View)

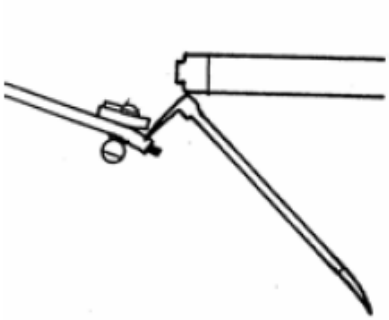

Force The Door (Top View)

Note: The firefighter faces the door at all times.

FORCING *OUTWARD* OPENING DOORS

Using the Fork End

- GAP the door by placing the bevel side of the FORK toward the frame, just above or below the lock.
- SET the tool, pry the door by pulling out the Halligan so the fork can be driven in past the inside frame. Be careful not to bury the tool into the doorstop (see Section 16).
- FORCE the door, set the FORK end around the inside of the door and by pulling or pushing the Halligan tool away from the door.
- In order to use this method, the Halligan must have sufficient room to allow the movement of the tool away from the door.

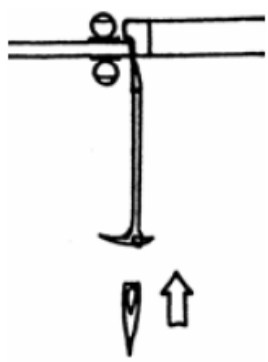

Gap (Top View)

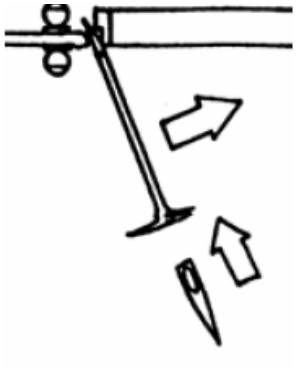

Set (Top View)

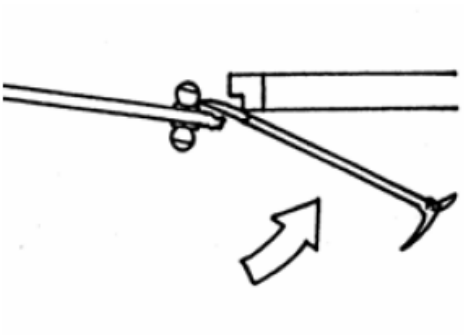

Force (Top View)

Note: These methods will be dictated by the configuration of the building or any obstructions near the door.

PROBLEMS ENCOUNTERED WHEN FORCING

Problem: Recessed door or obstruction.

Solution: To allow the ADZ to be driven in and around the door stop to provide sufficient space for the ADZ end to move away from the door.

- Make a hole in the wall (if possible), for the movement of the tool.
- GAP - SET - FORCE the door.

PROBLEMS ENCOUNTERED WHEN FORCING *OUTWARD* SWINGING DOORS

Problem: Difficulty getting a purchase point (tight seam between door and frame).

Solution:

- Use the blade of the axe
- Use the fork or adz end of the Halligan.
    - Tilting the adz up or down may start the purchase point easier.

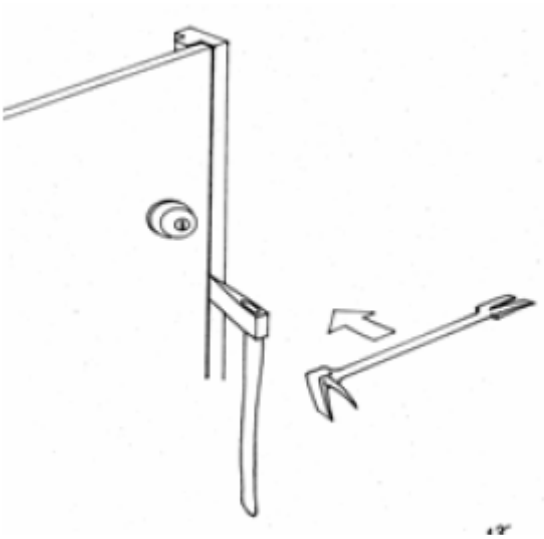

Blade of the Axe

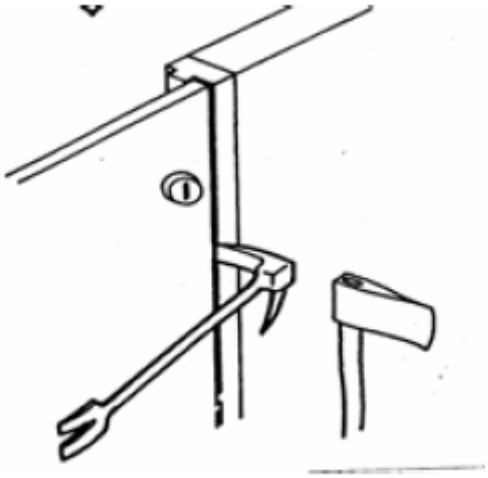

Adz of the Halligan

METAL STRIP ON THE EDGE OF THE *OUTWARD* OPENING DOOR

Additional security may be installed on these doors by bolting a metal shield to protect the space between the door and the frame. It may be full or a partial length shield. Dealing with the shield will require an additional step before proceeding to Gap- Set - Force.

METAL STRIP ON THE EDGE OF THE *OUTWARD* OPENING DOOR

- Drive the ADZ end under the edge of the metal strip and push the tool toward the door. Work the ADZ between the door and the frame and drive in to establish a gap.

- Drive the FORK end under the edge of the metal strip and push the tool back toward the door.
- Work the FORK between the door and the frame. .

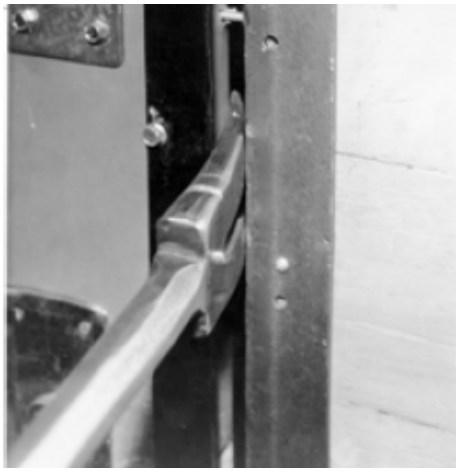

Note: Reverse the tool of necessary.

METAL STRIP ON THE EDGE OF THE OUTWARD OPENING DOOR

- Drive the ADZ end between the door and the shield, bending the shield away to allow entry of the Halligan FORK.

- Shear the bolts and pry, bend or remove the shield as a last resort.

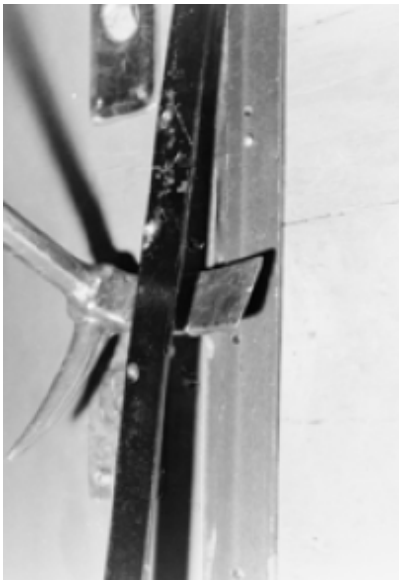

Note: At time, if the angle iron is well secured, it may assist you in opening the door, if not, you may have to completely remove it to open the door.

Section 9

Hydraulic Forcible Entry Tools

HYDRAULIC TOOLS

These tools are designed for doors that open inward and are also successful for opening sliding elevator doors. These effective tools work best on doors with strong metal frames.

These tools are simple to use. The Rabbit Tool is a two piece unit made up of a spreader and a pump. The Hydra-Ram is a one piece unit that combines the pump and spreader together.

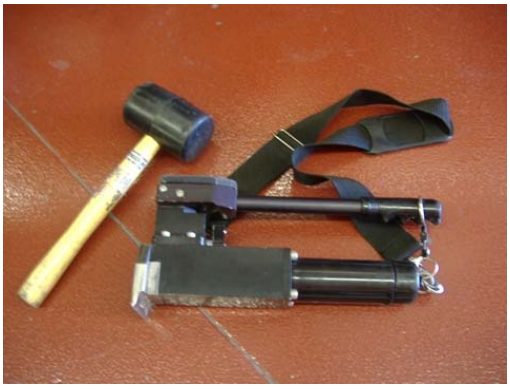

Hydra-Ram

Rabbit Tool

RECOMMENDED STEPS FOR FORCING A DOOR

- **GAP THE DOOR** - Using the ADZ end.
- **SET THE TOOL** - Insert the jaws between the door and the frame midway between the knob and the lock. The jaws must be in the CLOSED position.
- **FORCE THE DOOR** - The door should open within several pumps of handle.

GAP

SET

FORCE

Note: When there are multiple locks, insert the jaws between the knob and lock and move to the proximity of the next lock.

THE DOOR DOES NOT OPEN DURING THE INITIAL OPERATION

Problem: THE TOOL IS FULL EXTENDED AND THE DOOR DIDN'T OPEN.

Solution: Reposition the tool on the lock.

- Locate the locking device
- Wedge the door open with the head of the axe of Halligan tool.
- Reposition the hydraulic tool directly on the lock and extend.

Solution: Drive the lock off the door.

- Maintain the opening with the hydraulic tool.
- Drive the lock off the door with the axe and the Halligan.

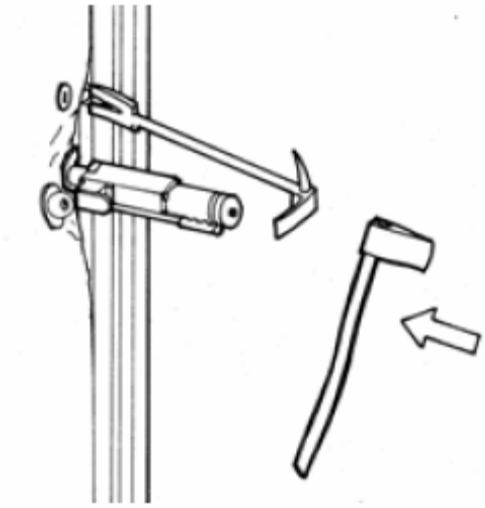

THE DOOR DOES NOT OPEN DURING INITIAL OPERATION

Problem: The tool is fully extended and the door still does not open.

Solution: Reposition the tool inside the doorframe.

- Maintain the opening with the hydraulic tool.
- Slip the axe or Halligan into the gap while maintaining the purchase.
- Reposition the hydraulic tool INSIDE THE DOOR FRAME.
- Pump the handle to extend the tool.

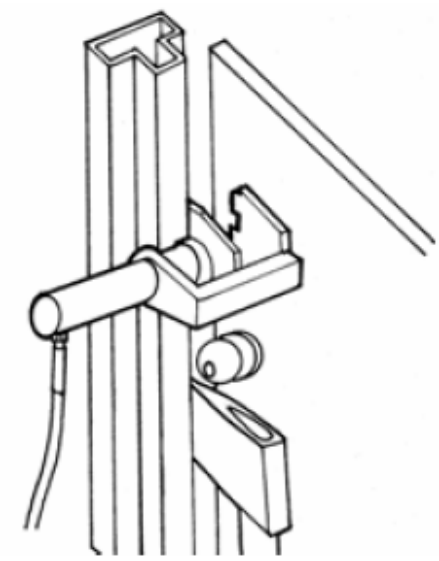

Reposition

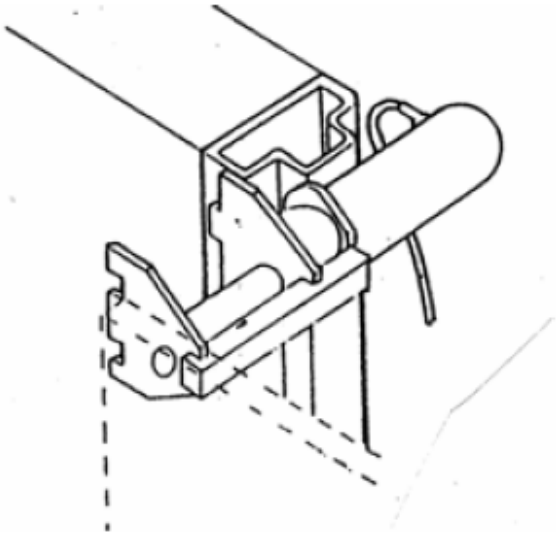

Extend

Note: This technique may only work with the Rabbit Tool.

Problem: The door is nearly forced, but needs a little more.

Solution: Use the axe head to extend the spread.

- Maintain a purchase point with the Halligan.
- Place the head of the axe between the door and the jaw, then extend.

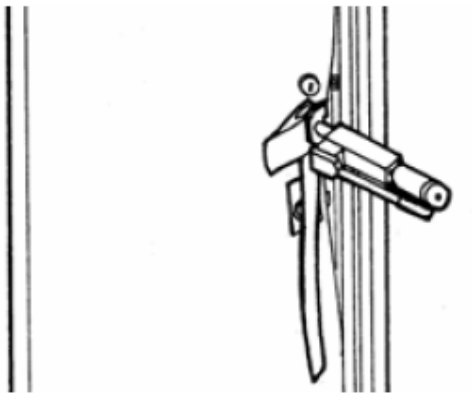

ANGLE IRON *INWARD* OPENING DOOR

- Usually bolted to the door, may be partial or full length.
- The angle iron may be flat stock or shielded (interlocked with "J" channel).

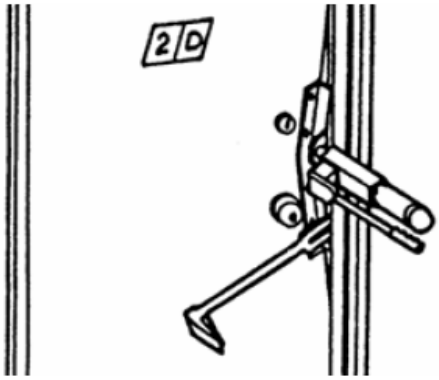

Partial Angle Iron

- GAP the door by placing the hydraulic tool above or below the angle iron and open to full extension.
- Maintain this purchase point with the axe or Halligan.
- Reposition the hydraulic tool between the door stop and the edge of the angle iron (on the angle iron)

Full Length Angle Iron

- GAP the door by driving the FORK end of the Halligan between the angle iron and the frame, pushing the Halligan towards the door.
- Reposition the hydraulic tool on the angle iron and extend.

MAGNETIC LOCK

These types of locks are usually installed on *outward* swinging doors. This is the exception to the use of the hydraulic forcible entry tool, which is primarily used for *inward* swinging doors.

- Place the Halligan through the door handle with the ADZ end towards the firefighter.
- Place the jaw of the hydraulic tool behind the ADZ end of the Halligan.
- Pump the tool using the door frame as the base and "pull the door from the magnetic lock.

Note: The hydraulic rams have enough power to overcome the force of the magnetic lock.

CUTTING THE MAGNETIC LOCK

Many times, from the exterior of the building, a carriage bolt will be visible at the top of the door. Cut this bolt at an angle and open the door. The magnet will stay attached to the magnetic pad, but the door will swing freely. This will also prevent the door from re-locking behind crews going interior.

The carriage bolt can be seen from the exterior of the building. Cut the carriage bolt at an angle with the circular saw.

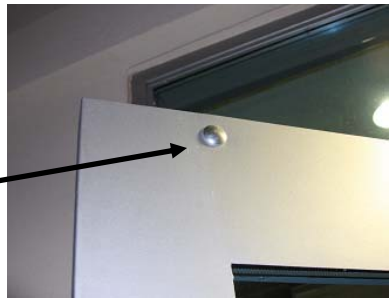

Exterior Door View

Jamb View

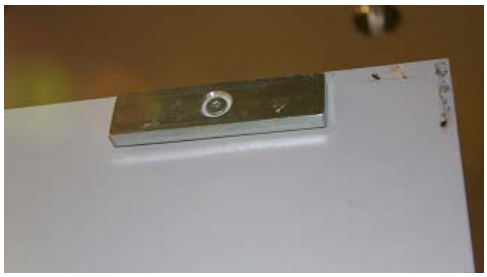

Interior Door View

Note: If the door is forced open and not cut, the firefighter can put a magnet over the magnetic pad to prevent the door from re-locking.

MULTI-LOCK DOOR

These types of doors, as described in Section 6, are formidable doors. Listed is the suggested order of tool placement in forcing these types of doors.

- Force the lock side pin first (door knob side).
- Force the top pin second.
- Force the bottom pin third (may be forced by placing the hydraulic tool at the bottom corner of the knob side).
- If necessary, force the hinge side fourth.

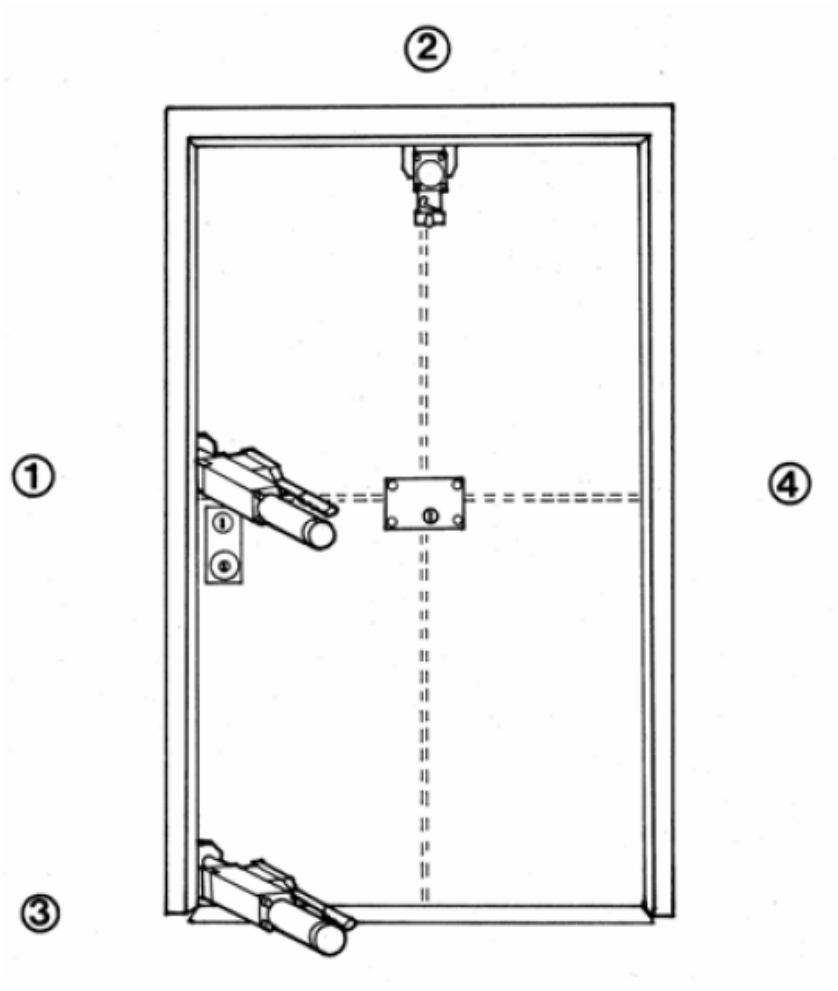

Forcing a Multi-Lock Door

Section 10

Hinges

HINGES

TYPES:
There are many types of used both residentially and commercially today. The most common types that will be covered in this sections are:

- Standard
- Self-Closing
- Pin Type

STANDARD HINGES
Most common type of hinge found in residential occupancies. May find two or three mountain on a door. The center pin connects the two pieces

SELF CLOSING HINGE
This hinge is found most often in commercial buildings. It is a seal, spring-loaded hinge. These hinges are mounted in sets of two or three per door.

PIN TYPE HINGE
These hinges are mounted on the exterior of commercial occupancies. The “pin” is secured to the frame and the hinge is secured to the door.

- Forcing a door at the hinge should NOT be a primary means of gaining entry.
- Once the door is forced this way, the door will lose integrity.
- The primary means of entry should be the lock side.
- Forcing a door at the hinge side should be done when all attempts at the lock side have failed.

STANDARD HINGE - *INWARD* OPENING DOOR

USING THE HALLIGAN

- Force the door enough to expose the hinge so work can be done directly on the hinge.
- Create a gap between the door and the jamb using the ADZ or FORK end of the Halligan.
- Place the working end of the tool just below the hinge.
  - ADZ end apply force up and down.
  - FORK end apply force toward and away from the door.
- Using the PIKE end as a fulcrum point, separate the hinge from the door frame.

USING A HYDRAULIC TOOL

- Create a GAP on the hinge side of the door by “battering” the door with a sledge or axe striking on the solid part of the door adjacent to the hinge.
- SET the hydraulic tool above or below the hinge.
- FORCE the door using the hydraulic tool in the same manner as from the lock side.

STANDARD HINGE

REMOVING A DOOR

With the door partially open, slip the ADZ between the door and the frame just below the hinge, then pry up and down.

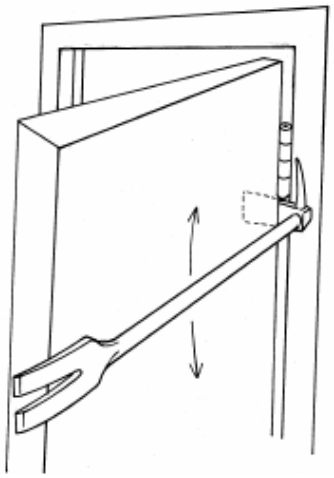

Note: Always attack the upper hinge first and work down. This will keep the door from pinching on to the tool

STANDARD HINGE - *OUTWARD* OPENING DOOR

USING THE HALLIGAN

- **Place the FORK end of the Halligan over the exposed hinge and pry up or down**
- **On stronger hinges, drive the Halligan over the hinge and twist side-to-side to break or loosen the mountain screws, then pull out.**
- **Remove the pin if possible to separate the hinge**

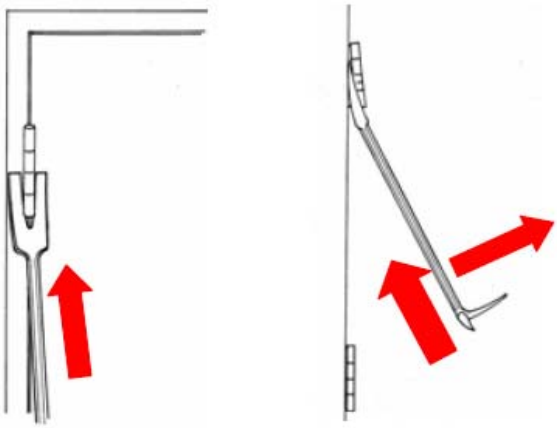

Note: Always attack the upper hinge first and work down. This will keep the door from pinching on to the tool

USING A CIRCULAR SAW/K-12

- **Starting with the top hinge and working down, cut the pin portion of the hinge off of the door.**

SELF CLOSING HINGES

These hinges may be found in a variety of structures, but are often found on bulkhead doors. They usually have a threaded rod with two cap nuts, which can be easily unscrewed with a pair of channel lock or, a snap-on cap which may be pried off.

SCREW OR SNAP ON CAPS

- Remove the top cap
    - If it is threaded, use the channel locks
    - If it is a snap-on, use the FORK end of the Halligan
- Pull on the bottom cap downward and out of the cylinder.

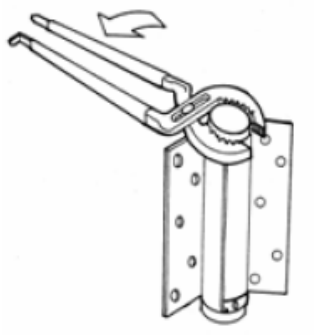

USING A CIRCULAR SAW/K-12

- **Starting with the top hinge and working down, cut the pin portion of the hinge off of the door.**

PIN HINGES

These types of hinges are usually found on shutters. They can also be found on commercial structures and places of public assembly. The "pin" is attached to the window or doorframe, and the shutter or door holds the corresponding hinge.

USING A CIRCULAR SAW/K-12

- Cut across the metal flange part of the hinge

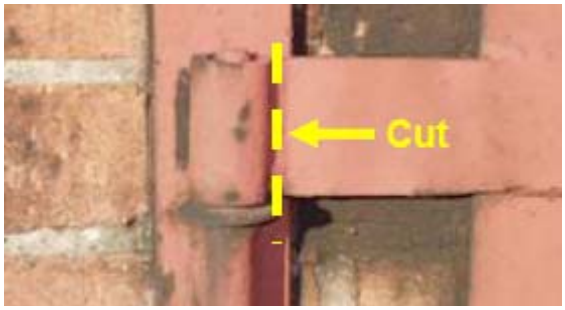

USING A SLEDGE HAMMER

- Break the brick or masonry around where the hinge is anchored into.

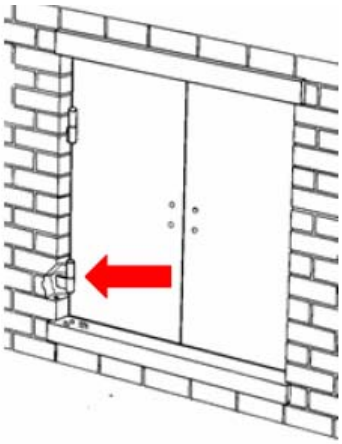

USING A HYDRAULIC TOOL

- Make a GAP between the doorframe and the door below the hinge.
- SET the hydraulic tool in the gap below the hinge.
- FORCE the door hinge away from the frame.

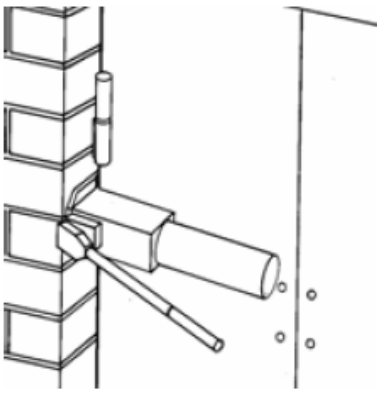

Section 11

Chocking the Door

CHOCKING THE DOOR

This is a very basic and important task that must be addressed during fire operations. Many doors are self-closing and self-locking that could delay other firefighters from making entry as well as trapping other firefighters operating interior.

When chocking a door, it is important to use something that will not be knocked out easily or create a trip hazard.

The following tools can be used when chocking doors:

WEDGE

AXE UNDER THE DOOR

AXE IN THE DOOR JAMB

HOOK CHOCK

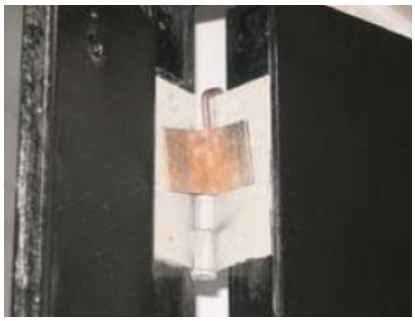

Section 12

Thru-the-Lock Entry

THRU-THE-LOCK ENTRY

The "Thru-the-Lock" approach is a means of gaining entry by attacking the locking device and opening the door with little or no damage to the door or frame. Making entry with this means, under the right conditions, creates excellent customer service and promotes good public relations.

This method of entry would only be used when time and incident conditions are not urgent or where conventional methods of forcing entry would create more damage than the fire itself.

Security devices on doors are constantly changing to provide added security. This section will address the most common types of locks that firefighters are faced with in the Valley. This section will outline some basic principles, methods, and techniques used in Thru-the-Lock Entry.

SIZE-UP

Size-up is an important function that is performed for all functions on the fire ground. It is critical that a proper size-up is done before we begin our forcible entry operation.

Though it is impossible to know for sure what type of lock is securing the occupancy by looking at a solid door from the exterior of the structure, we can make an educated guess based on:

- Type of occupancy
- Type of door
- Location of the lock cylinder
- Direction of the door travel (inward/outward opening)
- What we see on the door other then locks (carriage bolts)
- Anything unusually (cylinders out of line)
- Knowledge of the type of lock
- Let the fire condition dictate the method of entry

Combine all the information with past experience and proceed in attacking the lock, not the door. The cheaper the lock, the more difficult it may be to force. Cheaper locks have a tendency to break causing delays, and may require an alternative means of pulling the cylinder.

The skill of thru-the-lock entry methods needs to be practiced and studied.

THRU-THE-LOCK

KEY-IN-THE-KNOB LOCK
As the name implies, the locking mechanism is part of the knob. These devices are found on both inward and outward swinging doors. The spring latch on the majority of these locks enters the striker approximately 1/2 inch.

FORCING THE KEY-IN-THE-KNOB LOCK - Using the Officer's/A-Tool
The doorknob can be removed simply and quickly with the Officer's Tool, without damaging the stem assembly.

If the **door is hollow,** an axe can be placed behind the tool to give the fulcrum a substantial base to pivot off.

After the doorknob is removed, insert the stem of the Key Tool into the slot (if present) or into the back of the spring latch and pull or twist toward the hinge side of the door to activate the latch.

FORCING THE KEY-IN-THE-KNOB LOCK – Removing the Center of the Knob

There are some locks where the center of the knob can be removed (example, Kwikset type lock) with a knife-like tool or slotted screw driver.

By using the **"Bam-Bam Tool"** you can pull the face of the lock to expose the stem slot inside the knob where the correct Key Tool can be inserted.

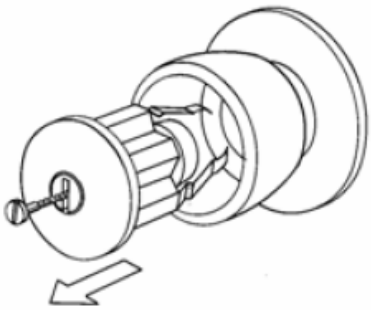

FORCING KEY-IN-THE-KNOB LCOKS - OUTWARD SWINGING DOORS

Key-in-the-Knob locks on outward swinging doors have a simple spring latch which can be slipped back (opened) with a flat tool such as a Shove Tool.

At times there is a simple device known as anti-loitering pin, which may be added to the latch. This pin prevents the insertion of the shove tool without moving this pin first.

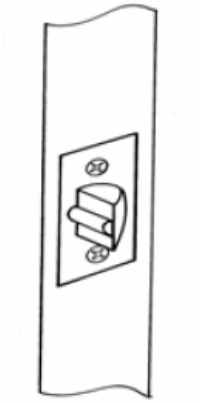

Pin Engaged

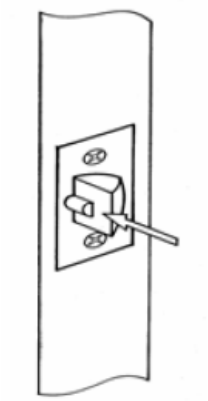

Pin Pushed Back

TUBULAR DEAD BOLT

This is a very popular locking device. It may be single or double key activated. It is a cross between the mortise lock, rim lock, and the key-in-the-knob lock. These locks may be recognized by their position on the door and/or the shape and size of the cylinder.

These locks have become more sophisticated as the demand for greater security has increased. They may have a hardened steel rod through the center of the locking bolt. The length of the bolt has been increased to the point that it **may take two full rotations of the key to remove the bolt from the keeper**.

The lock face is usually held in place by a hardened steel mounting. The cylinder is either **too deep or too wide**, which prevents the K-Tool from being used. In order to use the Thru-the-Lock method, the cylinder needs to be removed to enable the use of a Key Tool to trip the lock. If the K-Tool is unable to remove the cylinder, then an alternate method of removal would be needed in order to use this method.

If the cylinder is unable to be removed then you will have to resort to conventional forcible entry methods to force the lock.

The stem of the tubular deadbolt, which retracts the locking bolt, can be various shapes

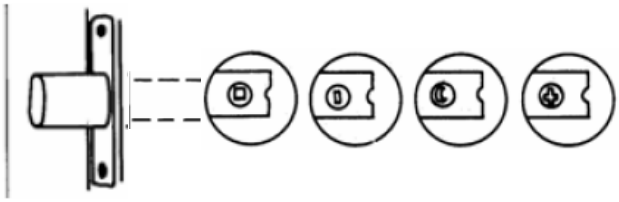

FORCING THE TUBULAR DEAD BOLT

- Remove the cylinder by pulling it out with either the Officer's/A-tool or K-tool.
- Insert key tool.
- Rotate to open.

Technique Tip: Place the Officer's Tool at an angle to start the operation.

Note: Using the Officer's Tool would be the preferred method on most of these locks due to its ability to get a better bite behind the cylinder.

These locks may be found below the normal entry lock and door knob to prevent someone from kicking in the lock.

FORCING THE TUBULAR DEAD BOLT

Problems Encountered When Using the K-Tool

Cylinder too deep

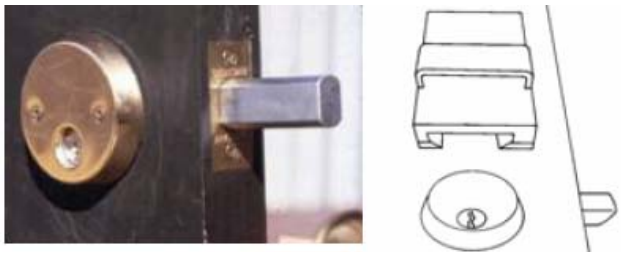

Cylinder too wide

RIM LOCKS

These locks are usually installed as an add-on lock. They are installed on the inside surface of the door (with the cylinder extended through the door). Only the cylinder is visible from the outside of the door. See Section 5 for types of rim locks.

PRINCIPAL OF OPERATION – RIM LOCK

The back of the rim cylinder has a stem, which is inserted into the backside of the lock. As the key is rotated in the cylinder, the stem on the back end of the cylinder rotates the latch or bolt, which locks or unlocks the lock.

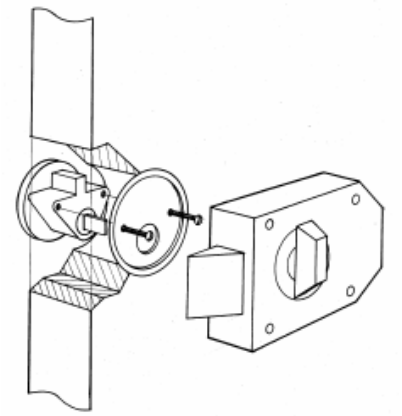

FORCING A RIM LOCK

Using A Lock Puller (Officer's Tool / K-Tool)

- Set the lock puller behind the cylinder getting a secure purchase.
- Pry up on the lock puller, pulling the cylinder from the door.
- The back plate is either pulled through the opening or the set screws are ripped from the back plate.
- Insert correct "Key Tool" and turn, unlocking the lock.

Note: The cylinder is held in place by two set screws through a back plate. It is the back plate being pulled through the cylinder hole that determines the difficulty.

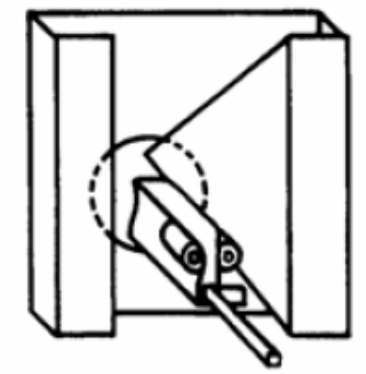

Set the tool

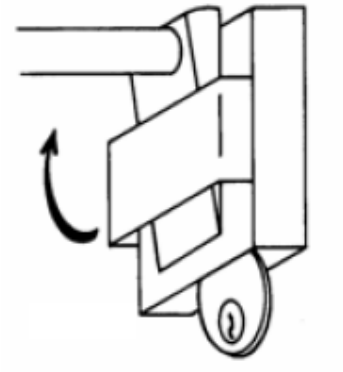

Pry up on the cylinder

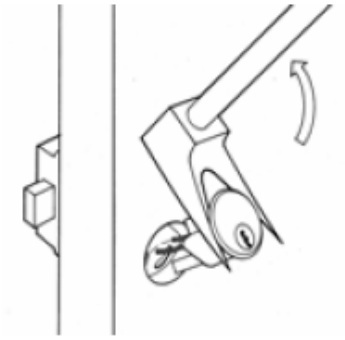

Back plate pulled through

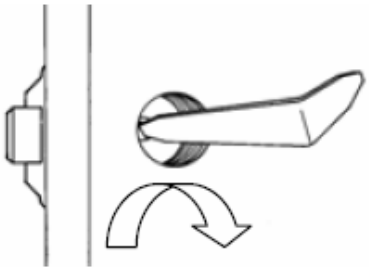

Turn the key tool

Note: Once the lock cylinder has been pulled, be sure to use the proper end of the key tool.

FORCING A RIM LOCK

Lock cylinder removed

Proper end of key tool

On some rim locks, a shutter may be installed over the lock mechanism. This will prevent the insertion of a Key Tool. The lock may have to be driven off the door with the tool inserted in the cylinder hole.

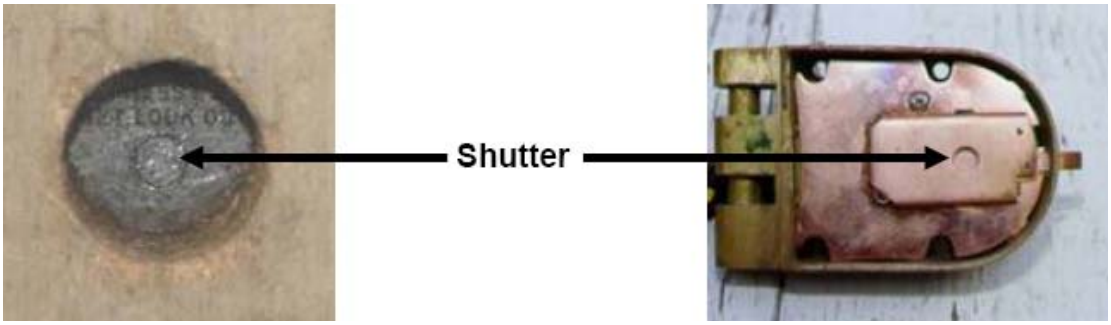

DRIVING OFF THE LOCK

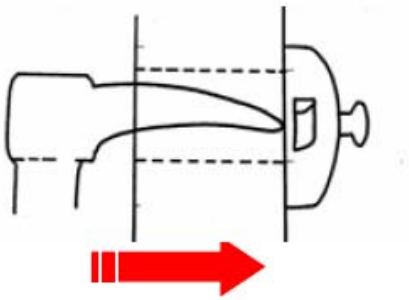

Pike end

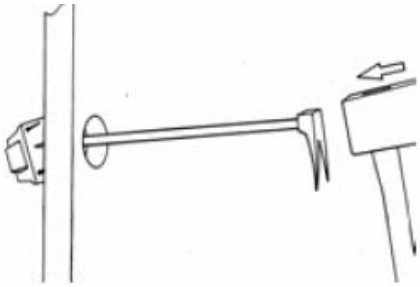

Officer's Tool

SPECIAL TYPE RIM LOCKS

POLICE LOCK (Vertical Bar Lock) – Only on *Inward* opening doors

This rim lock is very popular in tenements. It utilizes a removable steel bar which it fits into a slide in the lock and extends into a socket in the floor. The bar usually stays in the slide in the “unlocked” position. Its presence is indicated by the amount of resistance met at the lock. Also, the cylinder may not line up vertically with the other cylinder locks on the door since it does not have a bolt "throw" like other rim locks. The lock, door and bar arrangement is that of a right angle. It provides resistance to any forward pressure applied by someone trying to force the door inward.

Note: If trying to open from the inside, you will have to slide the bar toward the middle of the lock. A tool may be required to knock the bar from the keeper.

FORCING THE POLICE LOCK – Using Officer’s Tool / K-Tool

Recognize the lock that you are dealing with. Generally it will not be in line with the other cylinders since it has no bolt or latch (throw) into a keeper. The key in forcing this lock is the recognition of the type of lock.

FORCING THE POLICE LOCK - Using Officer's Tool/K-Tool

- Pull the cylinder
- Insert and turn the correct Key Tool. The Key Tool is turned in the same direction as the key.

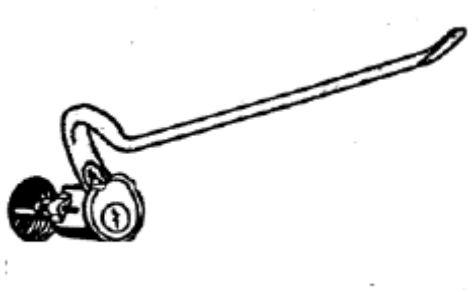

Pull the cylinder

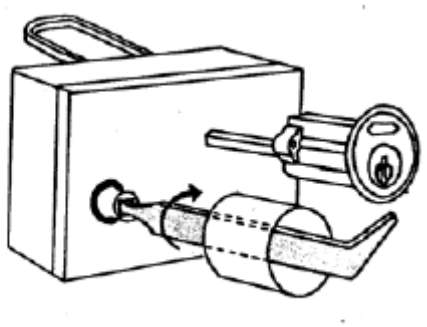

Turn the Key Tool

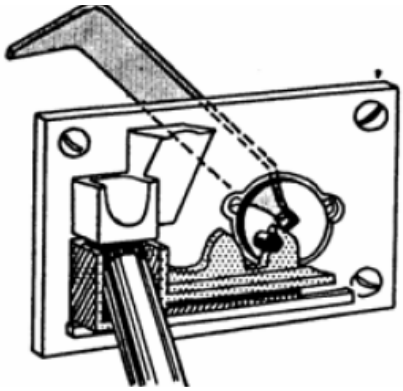

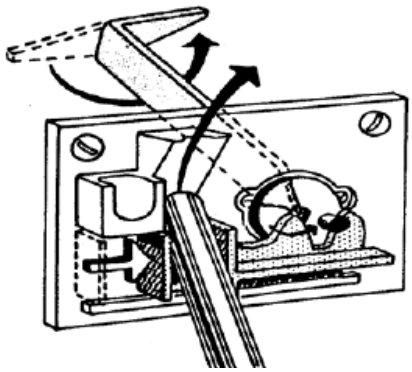

Note: The Key Tool is turned the same as a key. As the Key Tool is turned, the cam slides over moving the bar out of the slot.

Conventional Forcible Entry – Police Lock

If the Thru-the-Lock method does not work, you will have to resort to a conventional forcible entry method. This may not be an easy task.

- Force any and all other locks first, e.g. rim and mortise locks.
- Sharply "Batter" the Police Lock with the Halligan Tool or axe, attempting to bounce the bar out of the floor slot.

Conventional Forcible Entry – Police Lock

- Pull the knob toward you and strike the bottom panel of the door causing the bar to jump out of the floor slot.
- After removing the cylinder, drive the lock off the door with the pike of the Halligan Tool or the Officer's Tool.
- As a last resort, knock the panel out of the door, but make sure there is a charged line in position.
- Forcing the Hinge Side of the door. Make sure there is a charged line in position, and try to keep the lock side open as far as possible to make it easier to force the hinge side. Force the upper hinge first.
- BARGE the door in with your shoulder to bend the bar. This will take considerable force and should be done with at least two firefighters.

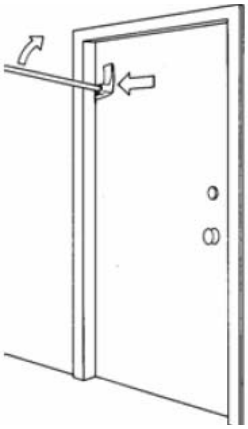

Note: The last two methods destroy the integrity of the door and a charged hose line must be in place.

FOX LOCK (Double Bar Lock)

This rim lock is easily recognized from the outside of the door by the location of the lock cylinder in the center of the door. The cylinder is usually shielded by a rectangular metal plate, which is held in place with four carriage bolts.

Two sets of carriage bolts near the outer edges of the door will indicate the location of the cradles, which guide the locking bars.

The handle in the center of the lock must be pulled toward the operator to engage the clutch inside the lock to move the bars.

DOUBLE BAR LOCK (FOX LOCK)

Outside View

Inside View - Locked

Inside View - Unlocked

Points to consider:

- The rotation of the key turns a gear between the sliding steel bars. This slides the bars in and out of the doorframe. These bars can penetrate up to two and one-half inches inside the doorframe or into brackets mounted on the frame itself.
- The position of the bolts, which guide the bars into the doorframe, will show you which way to turn the key. Usually turning toward the lower set of bolts will unlock the device.
- The most effective tool to pull the cylinder is a K-Tool. Also the ADZ of the Halligan can be “notched” to catch the inside rim of the cylinder to pull the cylinder, see Section 16.

DOUBLE BAR LOCK (FOX LOCK)

- The cylinder of this lock is generally recessed or flush mounted, which initially makes the K Tool ineffective for pulling the cylinder. The door may have to be battered and dented slightly to make a purchase. At times, by using the PIKE of the Halligan Tool, you can pry the cylinder out.
- After pulling the cylinder, and inserting the Key Tool, exert a little inward pressure on the Key Tool. This will push the gear into the teeth of the locking device, thus engaging the drive gear. Maintain this pressure and turn the "Key Tool" to unlock the device.
- To open this device from the inside the thumb knob must be pulled toward the operator to open the lock.

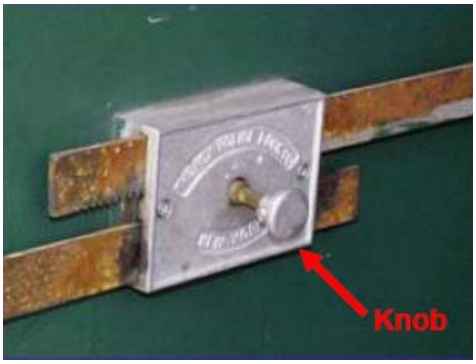

FORCING THE DOUBLE BAR LOCK (FOX LOCK)

- Recognize this lock.
- Shear three of the bolts holding the cylinder guard (plate) and PIVOT the plate to expose the cylinder.
- Remove the cylinder, using the K-Tool, Officer’s Tool, modified adz end or pike end of Halligan.
- PUSH and TURN the Key Tool (5/32-inch square stem) IN to engage the clutch, usually toward the lower bolts holding the bar, same as a regular key.

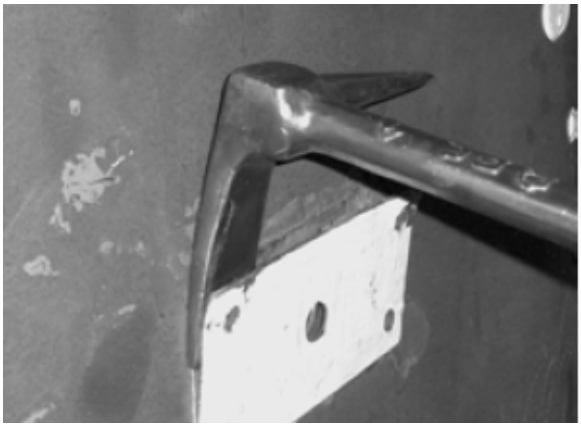

FORCING THE DOUBLE BAR LOCK (FOX LOCK)

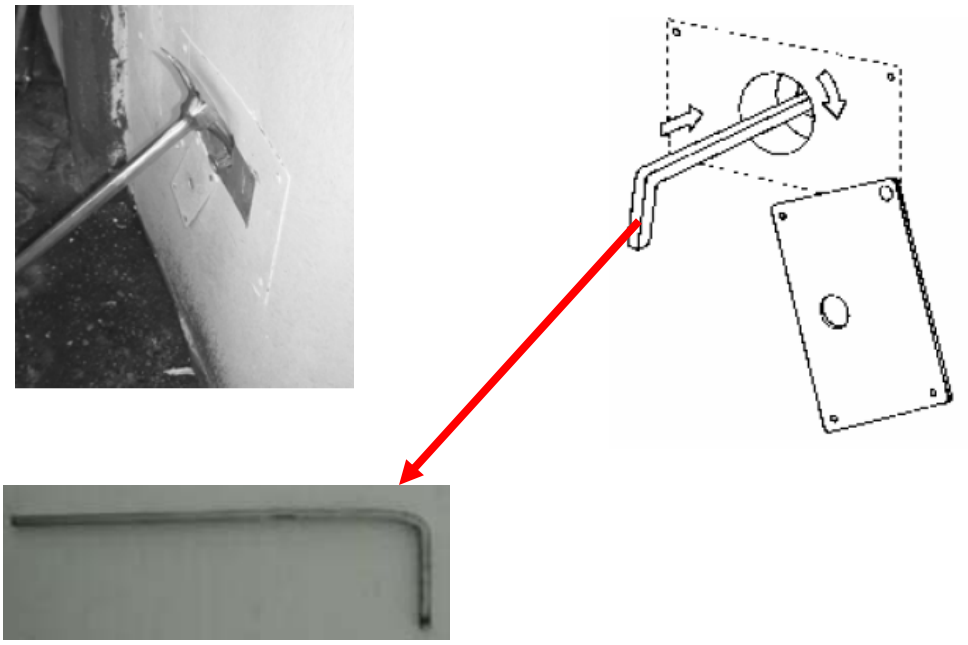

Prop Key Tool is the 5/32 Square

MORTISE LOCKS

These locks are designed to fit into a cavity in the edge of the door (either metal or solid wood). They have a solid, threaded key cylinder which is held in place by two set-screws. There are various types and styles of these locks available today.

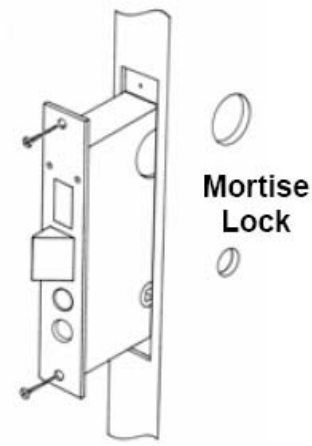

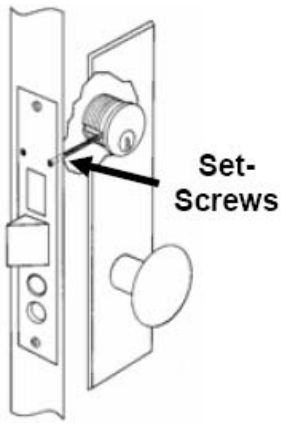

PRINCIPLE OF OPERATION – MORTISE LOCKS

As the key is rotated in the cylinder, it turns a cam on the back of the cylinder. This cam makes contact with a lever inside the lock box removing it from the strike. Although the key will cause the cam to make a complete revolution, the actual work of opening the bolt is usually accomplished between 5 and 7 o'clock or 7 and 5 o'clock of that revolution depending on which side (right or left) of the door the lock is mounted.

FORCING THE MORTISE LOCK:

- Set the K-Tool firmly on the cylinder and remove the cylinder by pulling up.
- Insert the correct Key Tool.
- Rotate the Key Tool. If the mechanism is found at 5 o'clock, rotate toward 7 o'clock, if found at 7 o'clock, rotate toward 5 o'clock.
- If mounted with a doorknob, it may have a latch that may be connected to a second assembly. This may necessitate a second revolution of the cam to remove the cam from the keeper.

Note: This second revolution may start a little higher in the opening, e.g. 9 o'clock or 3 o'clock.

Note: Once the cylinder is pulled, be sure to use the proper end of the Key Tool.

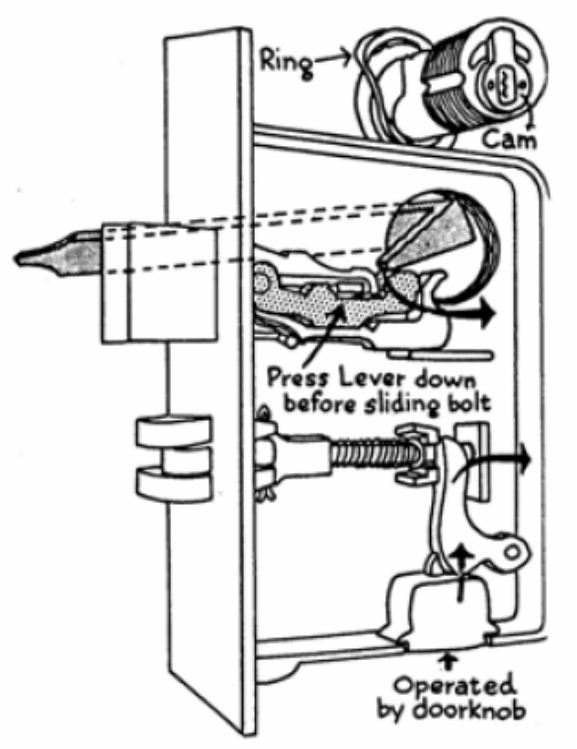

Lock Cylinder Removed

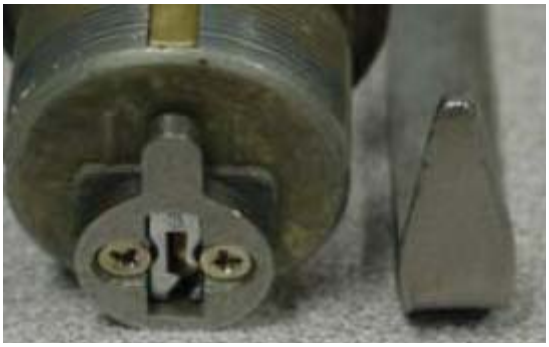

Proper Key Tool

PIVOTING DEADBOLT

This is a very popular lock found on aluminum and glass panel doors with narrow stiles. It is also found on solid glass (tempered glass) doors with the frame on the top and bottom edges only. These locks are found most often on commercial buildings.

PRINCIPLE OF OPERATION – PIVOTING DEADBOLT

These particular locks usually have a laminated bolt, which may extend up to 1-3/4 inches. The tripping mechanism is slightly different than other mortise locks, which requires the correct Key Tool to be used to depress the locking pin, which rotates the dead bolt. The pivoting bolt allows forward throw to be the entire depth of the frame channel.

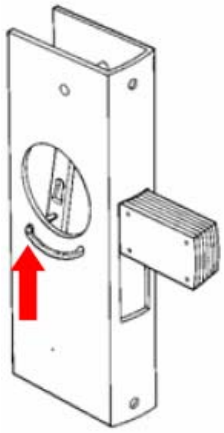

Pin Away
Door Locked

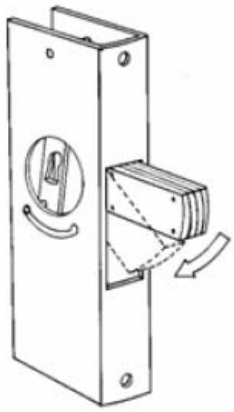

Bolt Pivots
Into Frame

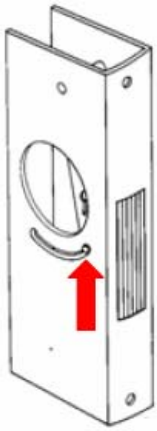

Pin Forward
Door Unlocked

The above is a narrow stile, pivoting deadbolt showing the 1¾ inch laminated bolt. The locking pin is AWAY from the leading edge of the door. The door is locked when the pin is in this direction. As it is depressed the bolt "pivots" into the frame. When the locking pin is FORWARD, the bolt is inside the frame and the door is unlocked.

FORCING THE PIVOTING DEADBOLT - Using The K-Tool

- Place the K-Tool over the cylinder and set by driving down over the face of the cylinder to lock onto the cylinder.
- Pry **UP** with the **ADZ** end of the Halligan, removing the cylinder.
- Using the bent end of the Key Tool, **DEPRESS** the pin and **SLIDE** the pin forward, pivoting the deadbolt down into the housing.
- As the locking pin slides forward, the bolt is retracted, unlocking the door.

Note: The pin will be located at either the 5 o'clock or the 7 o'clock position. Move the pin from 5 o'clock to 7 o'clock, or from 7 o'clock to 5 o'clock to retract the bolt, unlocking the door.

FORCING THE PIVOTING DEADBOLT – Using The Visegrips

The cylinder may be able to be turned out of the lock by using a pair of visegrips. Since all cylinder are held in place with set-screws, a quarter turn clockwise may bend the set screw just enough to allow you to turn the cylinder counter-clockwise and remove it. After entry is accomplished, the cylinder may be screwed back into the lock box.

This method may work on most mortise locks.
If the cylinder guard is beveled or rotates freely, pulling the cylinder is a difficult, if not impossible, task.

Note: At no time do we recommend breaking the glass in the door. The reason is safety. If it is "Plate" glass, the broken pieces may be quite large and very heavy. If they are in front of the doorway, they can become a tripping or slipping hazard. Glass and water make for a very unsafe combination when on the ground.

If a glass piece hangs up in the frame it may become dislodged and strike a member causing a severe cut or laceration. This is quite common since the smoke coming from the occupancy may cover the upper portion of the doorframe obscuring any fragments left in the door.

ALTERNATE MEANS OF FORCING – Using The Saw

If the occupancy has center opening double doors, take the forcible entry saw with the metal cutting blade and cut the bolt between the doors. There is enough room between the doors because of the door swing and the space is usually covered with only weather stripping. This may work with a single door if there is clearance for the saw to get in.

Note: some bolts have a ceramic insert making it more difficult to cut through.

ALTERNATE MEANS OF FORCING - Using the Halligan

Place the ADZ end of the Halligan between the door and the jamb, with the Halligan in line with the cylinder and parallel to the ground. Strike the Halligan with the axe or sledge downward on the ADZ end. This may snap the pin holding the bolt and pivot the bolt out of the keeps.

This may work with both single and double doors, and there is usually play between the doors to easily insert the ADZ end.

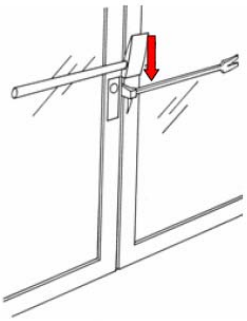

Section 13

Padlocks

PADLOCKS

Padlocks are detachable locking devices having a sliding and pivoting shackle that pass through fixed or removable hardware and then made secure.

This chapter provides information and recommended procedures and tools used for forcible entry of padlocks. Like any fire or emergency, operational procedures and conditions on arrival will dictate the course of action. Is it a *tactical response* - Fire and/or life threatening emergency or is it a *routine response* - Non-life threatening emergency.

Padlocks are used in all types of occupancies, e.g. multiple dwellings, commercial, private dwellings, vacant buildings and even subways and railroads.

Padlocks are used on both the exterior and interior of occupancies. They are found in the places you least expect and you may have to force one with only the tools you carry. Therefore, members should be able to identify the various types of padlocks and their attachment hardware and means of installation.

For the purpose of this manual, the names of the locks used by the author are “street” names and not the manufacturer’s product name.

CATEGORIES OF PADLOCKS

For the purpose of size-up and the understanding of padlocks, they are place in three (3) categories:

- Light duty
- Heavy duty
- Special purpose

PADLOCK SIZE-UP

- Type of padlock
- Hardware and installation (attachment device)
- How many padlocks and their location
- Accessibility

PARTS OF A PADLOCK

- Shackle or bow
- Body; solid or laminated
- Keyway

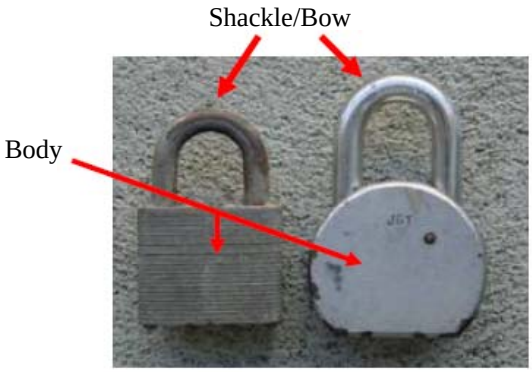

LIGHT DUTY PADLOCK

- Shackle or bow is usually 1/4 inch or less
- Shackle or bow is usually not case hardened
- Body of lock is solid or laminated
- Keyway (type may vary)

HEAVY DUTY PADLOCK

- Shackle or bow is usually 1/4 inch or larger
- Body of lock is solid or laminated
- Made of case hardened steel
- Toe and heel locking
- Guarded keyway

Hockey Puck / American 2000 Series

Round padlock, American 2000 is the most common. May also be called a “doughnut” lock.

- No exposed shackle.
- Locking device fits over the staple.
- Removable pin.
- May be case-hardened.

SPECIAL PADLOCKS

Fasco Lock

This is a heavy-duty, surface mounted slide bolt that is locked with an American 2000 lock. The Fasco has a built-in guard to protect the lock. It is bolted to the door with ½ inch carriage bolts, which makes shearing the bolts impractical. This lock is usually found on doors in maintenance rooms in housing developments.

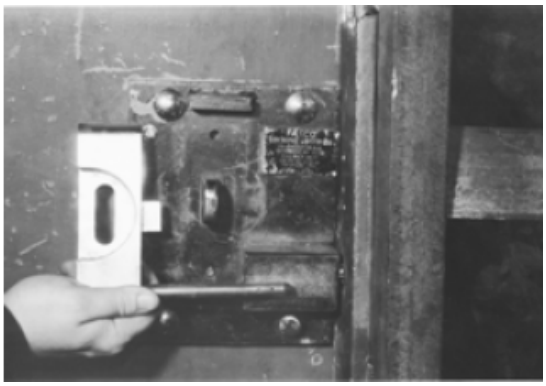

HORSESHOE PADLOCK

- "U" shaped body made of brass of case hardened steel
- Exposed "straight" traversing shackle
- Guarded keyway

WRAPPED LOCK

Constructed on site and is not produced in bulk. Each unit will vary in size and strength.

- Heavy gauge steel weld to the lock
- Limited access to the keyway

GATE LOCKS

These are devices made specifically for securing roll-down security gates. There are a few varieties of gate locks that are becoming very popular in urban areas. Here are a few of the most common the authors have encountered.

Bolt Lock (Medeco)
This case-hardened, tubular steel device goes through the gate and rail securing the occupancy. When secured properly it is very effective.

Mushroom Lock
This device is secured in the bottom rail of a security gate.

Tank Lock
An extreme method of protecting the padlock. This is made on site and is a steel housing the surrounds the padlock

ASSOCIATED HARDWARE USED WITH PADLOCKS

Hasps
Manufactured in many different sizes and strengths. They may be in-stalled with screws or bolts, which may be guarded by

Slide Bolts
A device that travels in a track, which locks into a recessed hole or hardware. Padlocks pass through rear of bolt and are made se-cure. These slide bolts may be made of case-hardened steel. They are installed with screws or carriage bolts which may be exposed or guarded.

Note: An alternate means of forcing a slide bolt is to place the FORK or PIKE end of the Halligan Tool inside the shackle and twist the entire lock to break the hardware (slide bolt) holding the lock.

FORCING PADLOCKS - USING THE CIRCULAR SAW/K12

Use the aluminum oxide blade for cutting padlocks. This should be the primary tool to remove padlocks, hardware, and attachment devices. It offers speed and is safer than striking tools.

Padlock with an *EXPOSED* shackle

- Rotate the padlock to the cutting position (this may be done with channel locks attached to a chain)
- Cut through both shackles at the same time.

Padlock with *SHIELDED* Shackle

This could be the American 747 series or a wrapped lock.

- Rotate the padlock; confirm that the shield covers both front and rear of the lock.
- Cut through both shields at same time.
- Apply two vertical cuts through the shackle if accessible.

Hockey Puck Lock (American 2000 Series)

Cut through the body of the padlock 3/4 up from the keyway. If lock remains engaged after being cut through, strike the side of the padlock with a sharp blow. This will usually remove the lock. Some of the newer 2000 series have a shielded keyway which must be cut to open the lock.

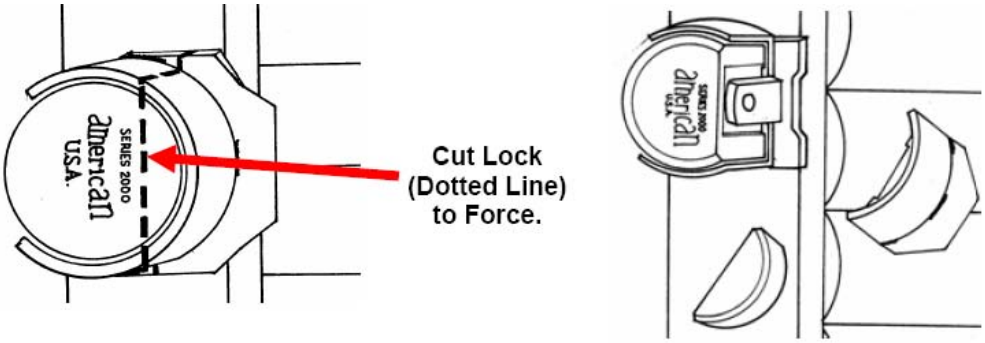

FORCING PADLOCKS - USING THE CIRCULAR SAW/K12

Note: The firefighter <u>MUST cut 3/4 inches up from the keyway</u> to clear the internal hasp.

Horseshoe Padlock

• Cut through the body of the lock and the shackle.
• At times it may be necessary to make two cuts, one at each end of the shackle.

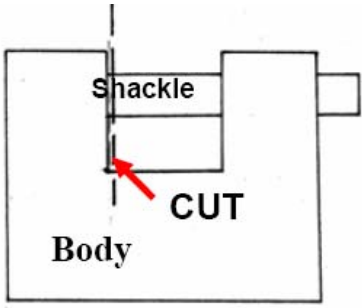

FASCO LOCK

METHOD I - Cutting the Slide Bolt

• Cut through the slide bolt.
• Hold saw at an angle to cut a wedge out of the guard.

METHOD II - Cutting the Lock

• The lock can be forced by cutting the body of the lock ¾ up from the key cylinder.
• Cut the lock until the key cylinder slides out of the body of the lock.
• Remove the lock, slide the bolt.
• If the key cylinder does not slide out, cut until the lock is in two pieces. Push the pin out and remove.

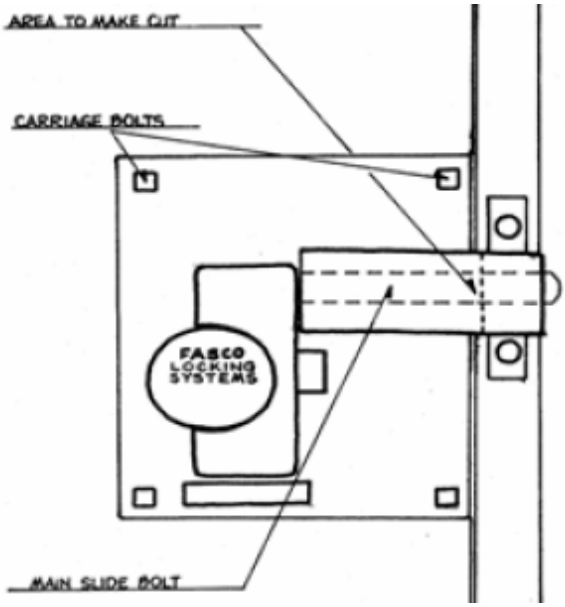

FORCING PADLOCKS - USING THE CIRCULAR SAW/K12

FASCO LOCK - Method I: Cutting the Slide Bolt

Cut at an Angle

Cut a Wedge

Cut through Bolt

FASCO LOCK - Method I: Cutting the Lock

Cutting the Lock

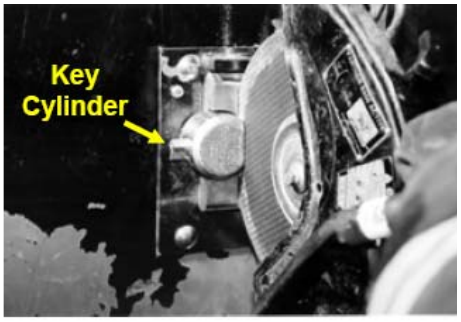

Key Cylinder Popped Out

Note: The location and the position of the padlock may not allow the circular saw to be used.

FORCING PADLOCKS – Using the Duckbill Lock Breaker and Pike of the Halligan Tool

DUCKBILL LOCK BREAKER

Place the Duckbill point between the shackle and the body of the padlock. Keep the tool in line with the padlock. The position and location of the padlock will determine the difficulty of the operation, e.g. padlock is too high or too low. Strike Duckbill with an axe or sledge hammer.

Members Holding the Duckbill Tool Should:

- Keep both hands on the tool with a firm grip.
- Keep the Duckbill tool as vertical as possible.
- Keep their eyes on the tool.

Members With the Axe or Maul Should:

- Position themselves where they can deliver the maximum force to lock.
- Strike the Duckbill perpendicular to the head.
- Start with short chopping blows until head is set into the shackle.
- More powerful blows are delivered until the lock body and the shackle are separated.

Note: During this operation, firefighters should be aware that once the lock is broken, it may become a projectile.

FORCING PADLOCKS – Using the Duckbill Lock Breaker and Pike of the Halligan Tool

PIKE OF THE HALLIGAN TOOL

- The PIKE of the Halligan Tool may be more effective on padlocks with short shackles.
- Place the pike into the shackle opening, keeping the Halligan Tool as horizontal as possible.
- Maintain pressure on the lock body.
- Deliver sharp blows with a maul or axe.

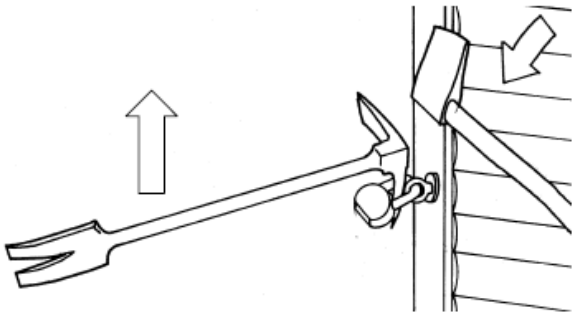

FORCING PADLOCKS – Using the Bolt Cutters

BOLT CUTTERS

Bolt cutters are excellent for cutting light duty pad locks, light duty chains, cable and hardware. As a last resort they can also be used to cut heavy-duty padlocks, but when used this way, they may damage the jaws of the bolt cutter.

If they must be used for a heavy-duty padlock:

- If possible, cut the chain closest to the lock, this allows the gate to be re-secured.
- Open the bolt cutter to the maximum.
- Position the bolt cutter so one handle is securely against a substantial object (wall, ground, etc.).
- Push with both hands on handle to cut the hardware.

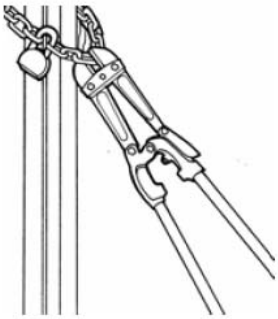

Cutting the chain

Cutting the lock

Note: Most heavy duty locks have heel and toe locking, both shackles may need to be cut or twisted to remove the lock.

FORCING PADLOCKS – Using the Pipe Wrench

- Secure the jaw of the wrench over the body of the lock.
- Apply force downward.

Note: This will only work on the American Series 2000 lock. This method of forcing will not work if there is any type of shield present.

FORCING PADLOCKS – Thru-the-Lock

If you are able to remove the keyway (cylinder), you might expose the lock mechanism and possibly trip the lock using a modified Key Tool or screwdriver. Two methods that have been used with some success are the Bam-Bam tool, which will remove the keyway, and prying off of the guard, (protecting the keyway), allowing the cylinder to possibly drop out.

BAM-BAM TOOL

This tool requires technique, patience and hardened sheet metal self-tapping screws.

- Screw the hardened sheet metal screw into the keyway of the padlock **(do not over tighten**).
- Give the Bam-Bam tool a sharp blow rearward.
- Re-tighten the screw.
- Strike sharp blows until the keyway is removed.
- Insert Key Tool or screw driver and turn to unlock.
- May work with limited success in a "**guarded keyway."**

Note: This tool will not work on Laminated padlocks.

FORCING PADLOCKS – Thru-the-Lock

Hockey Puck / American 2000 Series Lock

- Remove keyway (Bam-Bam tool) or pry off shield exposing keyway.
- Once the keyway is removed, insert rubber tip of Key Tool (modified) into the hole where keyway was.
- Secure onto pin.
- Take a quarter turn and remove the pin.

Section 14

Roll-Down Security Gates

ROLL-DOWN SECURITY GATES

Roll-down security gates are becoming quite common throughout many cities. These gates protect storefronts, factories, warehouse and residential occupancies. They are also used to secure occupancies **inside buildings**, vacant buildings and roof bulkhead doors in vacant buildings.

Adjacent to the opening (window or door) two channel rails are secured to the exterior wall. These are known as the "**guide rails**." Above the guide rails is a drum which houses the **curtain** (interlocking slats of metal or fiber glass). The **slats** ride up and down in the guide rail covering the opening. The curtain may be raised manually, mechanically (with a chain assist) or through electricity. All roll-down gates are constructed the same, except for the opening mechanism.

FIRE GROUND PROBLEMS

Designed for security, they have added to our fire ground problems by:

- Delayed discovery.
- Intense fire upon arrival.
- Extension of fire throughout.
- Very high heat and heavy smoke condition.
- Potential for back draft.
- Ventilation delayed and limited.
- Potential for wall collapse.
- Difficulty in locating the seat of the fire.
- Time consumed in extended forcible entry.
- Need for power saws to gain entry.
- Difficulty in determining the exact entrance door, when numerous gates are present.
- May block entrance to sidewalk cellar door, upper floors and FD Siamese connection.
- Gates may be secured from the inside, and occupants use another exit to leave building or worse yet, lock themselves inside.

TYPES OF GATES:

- Sliding Scissor Gate.
- Manual Roll-Down Gate.
- Mechanical Roll-Down Gate.
    - Chain Operated
    - Gear Operated
- Electric Roll-Down Gate.

- **Manual doors** are the least expensive, making them common in poorer areas or on doors that span small openings. The roller assembly on top of this door is spring loaded and the hood covering the roller unit will have no other assemblies attached to it. There is a handle attached to the last slat on the door. It is hinged and will lie flat on the sidewalk. The owner removes the locks, grasps the handle and lifts the door. So do you.

- **Mechanical roll-down doors** are the most common installation in the United States. This door is operated by a chain and pulley. The chain and pulley are located on one side of the roller assembly, enclosed within an open bottom metal box. The exposed chain is pinned in place and protected by hinged angle iron that is locked over the hanging chain with one or two padlocks. There is no manual handle on these doors, and it can be secured with multiple padlocks. The owner arrives, remove the locks from the door and the chain assembly and pulls up the door with the chain.. Chain assemblies may be inside or hidden behind small hatches and doors that look like part of the door framing. If there is no exposed hoisting assembly, look on both sides of the door for a small hatch, force it open and operate the chain hoist to open the door.

- E**lectrically driven doors**, the metal curtain being raised by a motor driven pulley. The motor is enclosed in a metal box to one side of the roller assembly. Inside is the chain hoist assembly you are unable to see from the street. The motor is controlled by a keyway set at street level. Like the store's owner, if we remove the locks and pins and have the correct key, we can raise the door with its motor drive. In reality, that key is never available on the fireground. The key assembly can be pulled and its three wires exposed and all shorted together to operate the door. However, if that fails or if the power to the building has been cut off, you must use the mechanical fail safe to get that door up. At the bottom of the motor assembly box, you will see a small cover plate held in place by machine screws. Remove that cover and inside are a cable or rope and a chain. One firefighter pulls on the rope or cable. This releases the clutch on the motor assembly. A second firefighter can then operate the chain and raise the door. This type of door can be installed with the entire mechanism inside the structure also.

You may find roll-down door assemblies that are constructed of rods instead of steel slats. These are installed so that night time strollers will be able to see into the store front windows. While the grill looks weak, it isn't. Don't make the mistake of thinking you can pry these doors, that they are only jammed in place blocking access. Treat them as you would any solid metal door, otherwise your entry attempt will fail and you will be forced to fight the fire from the sidewalk.

SLIDING SCISSOR GATE

This is the oldest type of security gate. These are among the first barriers that owners put in place to discourage vandalism and break-ins. Unlike the more common gates found today, these gates slide horizontally in a track to open.

Construction Features

- The bottom of the track usually picks up and secures the gate in the open position, some pivot ninety degrees to achieve maximum opening.
- These gates are commonly secured with padlocks.
- These locks will be located in the center of the opening of the gate, or off to one side, attached to the frame.

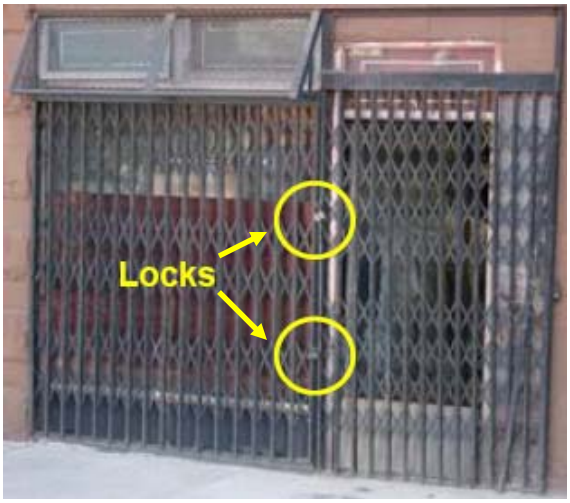

Forcible Entry Operations

- Locate and remove all padlocks and / or other locking devices.
- Slide the gate manually.
- Lift the bottom track and secure in open position. If possible, rotate gate ninety degrees to achieve maximum opening.

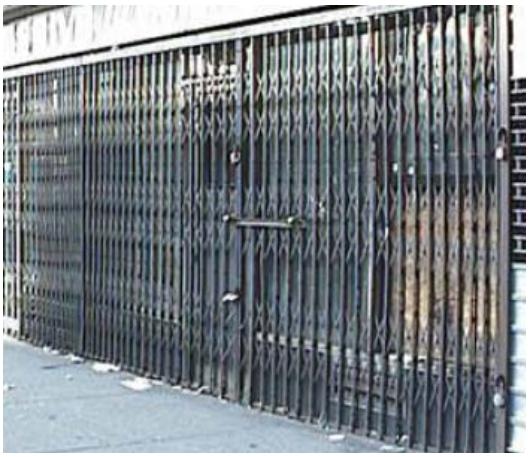

MANUAL ROLL-DOWN GATE

Usually found on the front of smaller occupancies. These gates can cover an entire storefront or just a doorway.

Construction Features

- Gates ride up and down a channel rail on each side of the gate.
- The slats may be wider on the older gates.
- The gate is attached to a winding drum.
- At the top of the gate (on larger manual gates), the drum may have a spring counter-balance to assist in the opening.
- The winding drum is concealed behind sheet metal housing or inside the building wall.
- These gates are secured with metal pins that pass through the channel rail and the gate. These pins are secured to the channel rail with a padlock that attaches to a metal clip or staple welded to the channel rail.
- Each gate may be secured with numerous padlocks.
- The manual gate is easily recognized by the absence of a raising mechanism housing on the side of the winding drum (top of the gate).
- Lifting handles are usually attached to the bottom rail of the gate.
- Slide bolts may be attached to bottom rail and may be secured into the channel rail with a padlock.
- The curtain may be constructed of:
    - Inter-locked, solid sheet metal slats (18-22 gauge steel)
    - Open grill metal bars, connected with metal tabs.
    - Fiber glass.

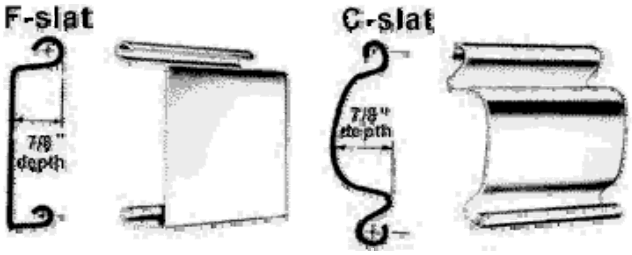

MANUAL ROLL-DOWN GATE

Forcible Entry Operations

- Locate and remove all padlocks and/or other locking devices.
- Pull (slide) all metal pins and slide bolts out.
  - Most padlock points will have removable pins.
  - Bottom rail usually has a slide bolt to disengage.
- Raise gate with the life handle or by the bottom bar.

MANUAL ROLL-DOWN GATE

Forcible Entry Operations

- Locate and remove all padlocks and/or other locking devices.
- Pull (slide) all metal pins and slide bolts out.
  - Most of the padlock points will have a removable pin.
  - Bottom rail usually has a slide bolt to disengage.
- Raise gate with lift handle or bottom bar.

MECHANICAL ROLL-DOWN GATE (CHAIN HOIST)

All of the same features as the manual gate. These types of gates are generally found on wider openings.

Construction Features

- Gates ride up and down a channel rail on each side of the gate.
- The slats will be narrower, span a wider opening.
- On gates mounted on exterior walls of buildings, the chain hangs from a narrow metal housing attached to the side of the winding drum housing. The chain is secured behind a hinged piece of angle iron. The chain is attack to a hold-down device such a s bolt to prevent pulling the chain out from the top of the angle iron. The angle iron is secured to the channel rail with one of more padlocks.
- On gates mounted with the winding drum concealed in the building wall, the chain will not be visible. The chain will be secured in a small access panel on the building wall adjacent to the channel rail. A key operated latch type lock will secure the access panel.
- The hoisting chain is secured behind a piece of angle iron and usually secured with padlocks.
- Each gate may be secured with numerous padlocks and slide bolts similar to the manual gates.
- The gate is usually larger, hence heavier.

MECHANICAL ROLL-DOWN GATE (CHAIN HOIST)

Forcible Entry Operations

- Locate and remove all padlocks and/or other locking devices.
- Pull (slide) all metal pins and slide bolts out.
- Free the chain hoist from its hold-down device and raise the gate with the chain.
  - The angle iron covering the chain hoist is usually hinged and has to be pivoted out and away from the rail to access the chain hoist.
  - If the angle iron is not hinged you may have to it pry open to access the chain.
- If the gate cannot be raised with the chain hoist assemblies, cut the chain near the top and raise it manually.

Different style housings for the pull chain

MECHANICAL ROLL-DOWN GATE (GEAR OPERATED)

All of the same features as the manual gate, this is another version of a mechanical gate. The difference in this gate is in how it is raised. The size of the opening is not necessarily an indication if this version of mechanical gate is present.

Construction Features

- Same construction features as the other gates.
- These gates are raised by turning a gear assembly with a crank handle.
- The gear assembly will be located at the top of the hoisting drum, in the same area as the chain hoist version.
- This version of mechanical gate will be able to be determined by what appears to be an eye bolt visible at the bottom of the housing assembly, off to one side.

Forcible Entry Operations

- If the crank handle is not readily available, or housed in the side rail assembly, similar to the chain, cut the gate.

ELECTRIC ROLLDOWN GATE

Same basic features as the other types of gates with the exception that it is operated electrically. It can be found in any occupancy, but usually is found on occupancies with large openings such as department stores and commercial buildings.

One gate may be used to cover multiple levels of an occupancy.

Construction Features

- Similar to mechanical roll-down but are usually recognized by a large metal motor housing adjacent to the winding drum.
- There may be a key switch located on the building wall on either side of the gate. This switch may also be located in a remote location inside the building. This key switch panel may contain a stop button; others stop with the switch in the center position of the key switch.
- All electrical operated gates are equipped with an auxiliary chain hoist to be used in case of a power failure. This chain will be located in the motor housing and may not be visible from the outside.
- Either a bottom hatch or a front panel, which is secured with sheet metal screws, may access this chain hoist.
- The chain hoist assembly may have a clutch cable or chain that must be pulled first to engage the assembly to open the gate. This electrical gate has now been converted to a mechanical one.

ELECTRIC ROLL-DOWN GATE

- These gates may also be secured with padlocks, pins and slide bolts similar to manual and mechanical gates.

Auxiliary Chain

Forcible Entry Operations

- Locate and remove all padlocks and/or other locking devices.
- If power is ON, operate the electric switch to open the gate.
  - This may be possible in the early stages of the fire.
- Pull the cover off the box to expose the control lever on the back of the switch.
  - Even when the screws are removed, the inner plate must be pried off.

Note: This box may have to be broken to gain access.

These methods of gaining entry may only work if there is not a large fire or high heat behind the gates. Once the gate is exposed to high temperatures it may begin to distort and jam as it rides up the winding drum.

ELECTRIC ROLL-DOWN GATE

There is no one, simple method of gaining entry through these obstacles. Each operation has to be treated accordingly. Size-up and the correct tools will dictate the method of entry.

OPEN-GRILL OR DESIGNER GATE (Variation of a Roll-Down Gate)

Same basic design as the other types of roll-down gates. The variation is that sections of the gate, either all or partial, are constructed of small, tubular pieces of metal or metal bars, connected with metal tabs. This type of gate is open so that you may see what is behind it.
.
This type of gate is generally used where high security is not vital or where the owner wants the public to view the display and also provide some security.

Construction Features

- All the same construction features of the other style gates.
- The curtain may be all or partial of a grid like design.
- Operation of gate will be the same as any other. It can be manually, mechanically or electrically operated.

OPEN-GRILL OR DESIGNER GATE

Construction Features

- Each gate may be secured with numerous padlocks.
- Slide bolts may be present at the bottom.

Forcible Entry Operations

- Locate and remove all padlocks and /or other locking devices.
- Pull (slide) all metal pins and slide bolts out.
- Operate gate based on the type of design, either manual, mechanical or electric.

LOCKING DEVICES FOUND ON ROLL-DOWN GATES

There are many ways to secure these gates. Having some knowledge as to how the locking devices are installed will aid you in removing them.

- Generally there is some kind of opening made into the channel rail and the curtain. Through this opening a “pin” may be inserted which prevents the curtain from moving up.
- There could also be an “eye” buried into the sidewalk to secure the bottom rail.

LOCKING DEVICES FOUND ON ROLL-DOWN GATES

Steps for removal

- Cut or open padlock and remove.
- Remove the pin.
- Raise the gate.

GATE LOCK (BOLT LOCK)

Another popular device for securing roll-down gates, fire doors, counter doors ad shutters.

Features

- No hasps
- No shackle
- No pin
- Resists cutting and drilling
- Pick proof

GATE BOLT (BOLT LOCK)

FORCIBLE ENTRY

Go to the weakest point of this lock, which is the brass pin which rotates the cam. One way to force this device is to apply pressure outward and try to snap the brass pin.

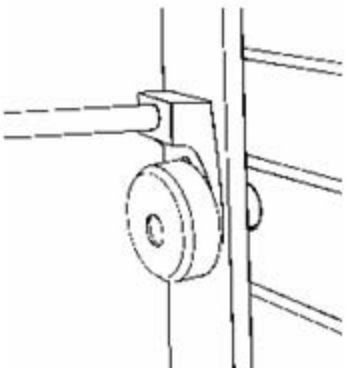

Note: With many of these locks being shielded with steel, another method would be to try and cit the body of the lock on an angle between the rail and the door.

EXTERNAL SHIELDS

Most any type of padlock can be found with an external shield. They are used to protect the padlock and to make forcible entry more difficult.

Types of Shielding For Padlocks

- Wrapped shield welded to padlock.
- Fixed shield to padlock attachment point.
- Removable shield.
- Welded box.

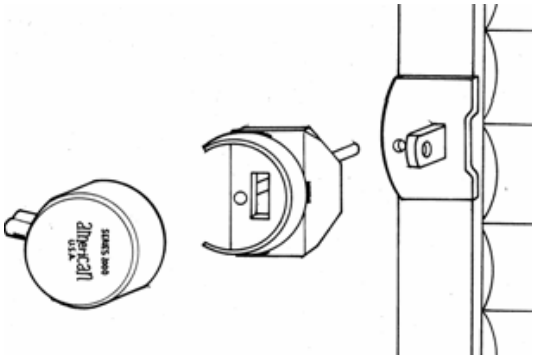

EXTERNAL SHIELDS

Forcible Entry Operations

- **Utilizing a circular saw/K12, cut through the shield and lock**
- **Cut the gate**

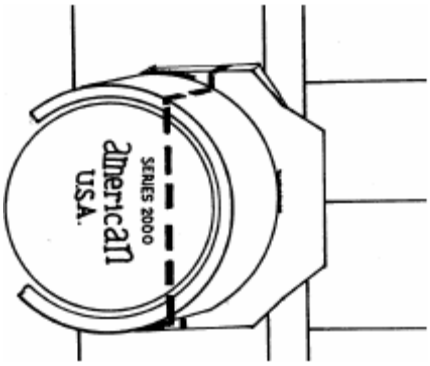

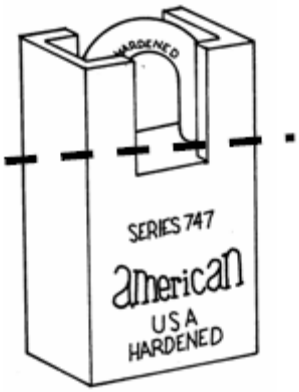

ROLL DOWN-DOOR SIZE UP PRIOR TO CUTTING

Forcing entry into a roll-down door is never easy. The techniques you can use have varying degrees of success depending on your size-up of the door, it's lock, it's operations, the time you have, fire conditions, and the potential life hazards.

It is important to remember, that if locks are visible from the exterior of the door, the quickest method is to cut the locks. If there are no locks visible or they are multiple and/or highly secured locks, cutting the door may be in option.

It is also important to remember, most roll-down doors have man-doors next to them, the quickest way to open multiple roll-down doors is to make access through the man-door and manually roll up the roll-down doors. This is not only quick, but it provides for customer service.

The effective way to get through a roll-down metal door is to cut the door open with a saw. You should cut the door under the following conditions. If the life exposure above the fire indicates that a protective stream is needed immediately to prevent auto exposure, to get portable ladders to victims, or to protect firefighters searching above the fire, cut the door. If the door is deformed by explosion or warped by heat, it won't be able to be operated even if you have the keys to the locks. Cut the door. If there are too many padlocks, if they are too strong, or if they inaccessible to attack, cut the door. If the door is operated from the inside, you must be able to get there quickly and safely. When getting to that position is impossible due to fire or other threat, cut the door.

An effective door size-up technique is to push on the door and consider the resistance that the door may have.

Look at the guides. At night, a flashlight can be used to get a good look at any evidence that the slats are locked together.

CUTTING THE ROLL-DOWN CURTAIN

There are many ways to cut roll-down doors to gain access. The following cuts are the most common that are both quick and effective.

It is important during the size-up to determine which cut will be made.

TRIANGULAR CUT

A triangular cut is one option to cut a roll up door. It is quick and dependable, but requires the operator to be able to operate to support the weight of the saw. The cut allows entry teams to make quick access, but must be opened up bigger by pulling the slate in case a quick egress is need.

Note: Do not cross cuts at the top until the second cut is complete and the door is ready to be opened.

CUTTING THE ROLL-DOWN DOOR

TRIANGULAR CUT

Making the means of egress large
After entry is gained, the roll up door slats in the triangle cut can be removed. This will cause the door above where the slats have been pulled to go up. The slats can be grabbed with channel locks or insert the PIKE into the metal and pull the slat out.

Drive the pike of the Halligan or grab the slat with channel locks to remove the metal slats.

CENTER CUT (Roll-Down door WITHOUT windlock)
The rolling steel door is constructed of interlocking slats. Because of this construction, entry revolves around sliding the interlocking slats apart. The most efficient method is by cutting a single vertical cut down the center of the door and then pulling the slats.

Most rolling steel doors are constructed with a guide on every other slat. Slats without guides are easily pulled free. However, some doors have guides on every slat. <u>Slides with guides cannot be pulled free.</u>

Make a cut down the center of the door starting at about head height.

Continue down the door until the bottom of the door is reached.

After the slats are pulled free, all the slats below will fall, and the door will roll up

INVERTED "L" (Roll-Down door WITH "windlock")
Some larger spanning doors have a device called a "windlock" that is essentially a metal bar that travels down all the guides. This prevents firefighters from being able to pull the slats out. When this occurs, a Box Cute/Barn Door Cut needs to be completed.

In this situation, the door must be cut from around the guides and pulled open.

INVERTED "L": Method 1: This cut sequence is conducted when the original operation calls for a Box/Barn Door Cut.

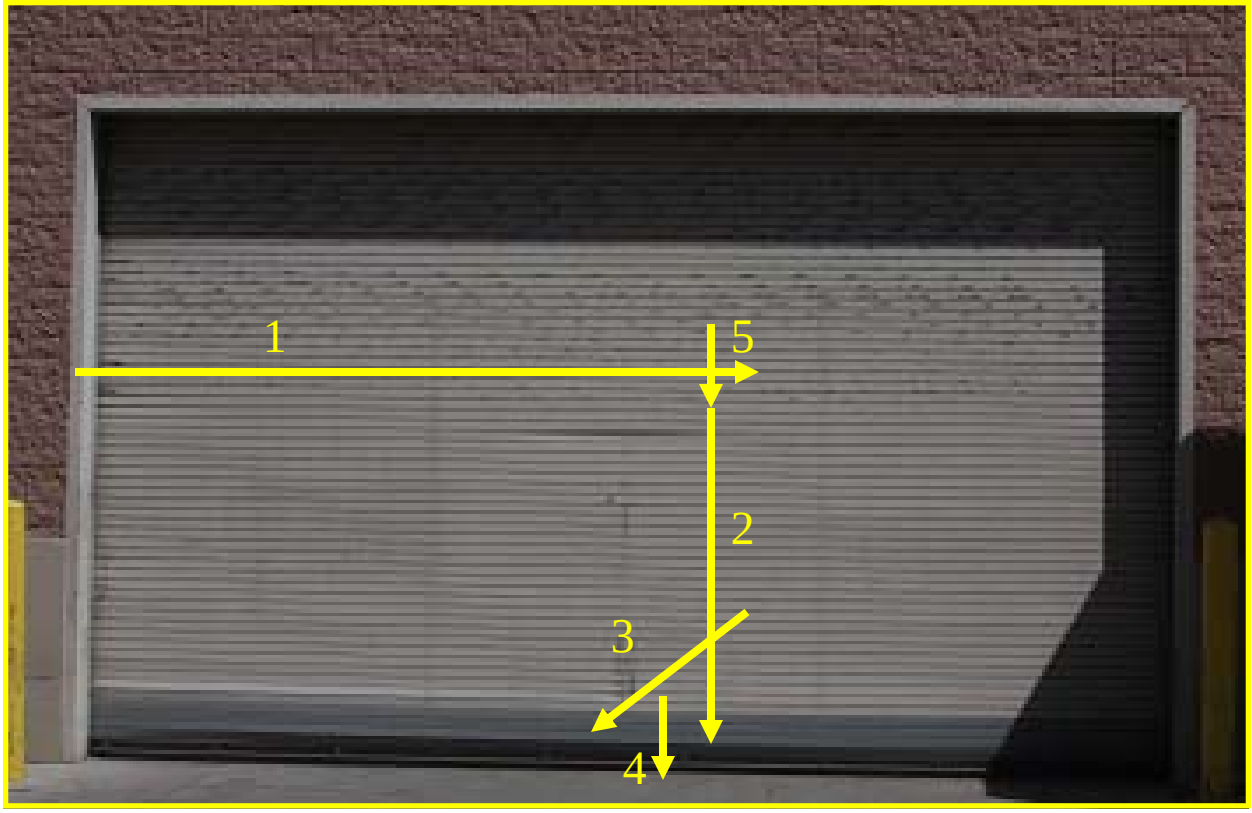

CUT SEQUENCE

1 1st cut horizontal just above head level, going 2/3 the width of the door.
2 2nd cut starts 6 inches below the 1st and goes down towards the rail. (do not overlap to prevent the door from falling in prematurely.
3 3rd cut angles from the 2nd towards the inside of where the opening will be (this will allow saw to penetrate deep enough to cut the angle iron at the bottom of the door.)
4 4th cut goes through the angle iron utilizing the triangle created with cuts 2 and 3.
5 5th cut connects 1 and 2, completing the cut.

INVERTED "L" (Roll-Down door WITH "windlock")

INVERTED "L": Method 2: This cut sequence is to complete a box/barn door cut when the operation began with an unsuccessful attempt with the center cut.

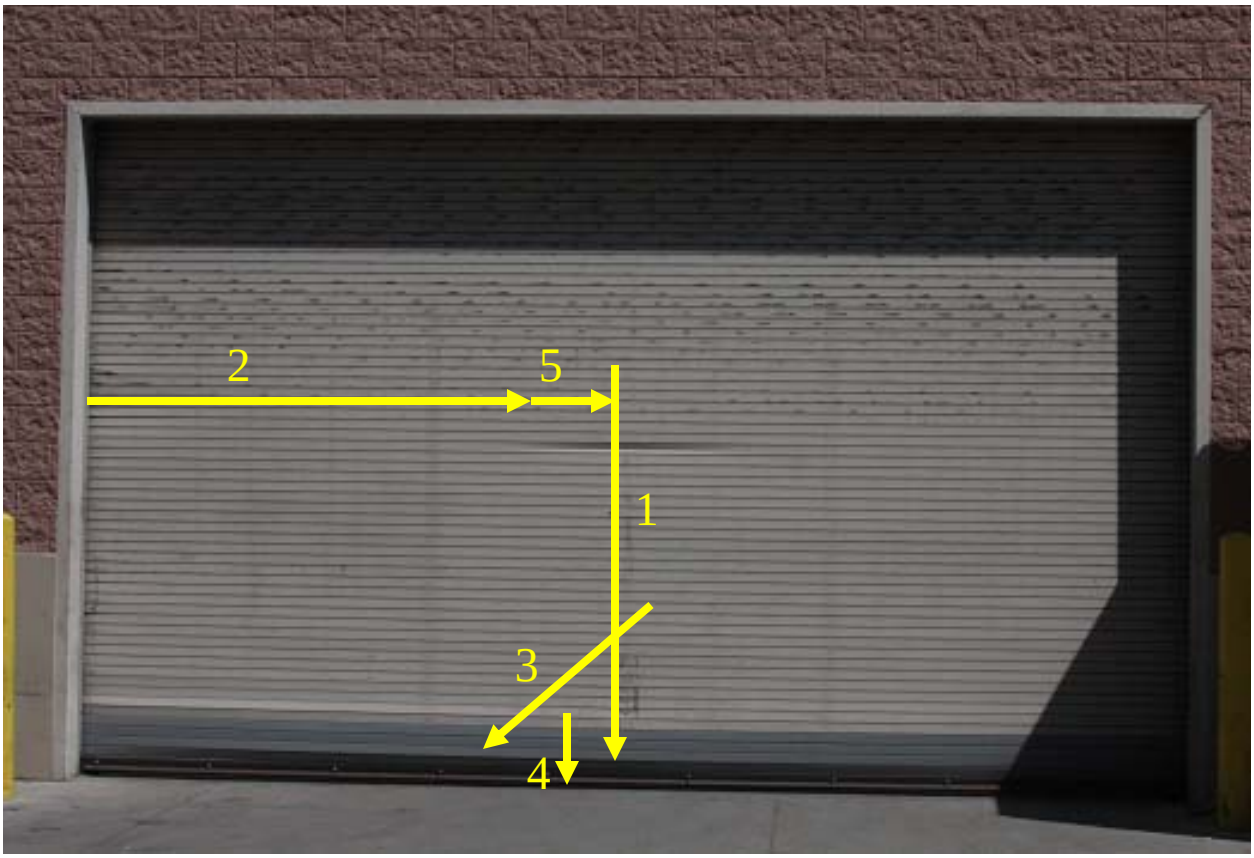

CUT SEQUENCE

1 1st cut down the middle in attempt to do a center cut and pull the slats.
2 2nd cut starts just above head level and stop about 6 inches from the first cut.
3 3rd cut angles from the 2nd towards the inside of where the opening will be (this will allow saw to penetrate deep enough to cut the angle iron at the bottom of the door.)
4 4th cut goes through the angle iron utilizing the triangle created with cuts 2 and 3.
5 5th cut connects 1 and 2, completing the cut.

OPEN-GRILLE OR DESIGNER GATE

These doors are commonly found in malls securing the individual stores. These doors may be manual or mechanically lifted. If the door is manually lifted, the firefighter may cut a section out large enough to fit their hand in and unlock the door. If the door is mechanically lifted, a variation of the Inverted "L" cut could be utilized.

MANUALLY LIFTED GATE

Exterior view: small section can be cut out above the lock so the firefighter can reach in to unlock and unlatch

Interior view: The firefighter will have to first unlock the bolt, then unlatch the gate to lift.

MECHANICALLY LIFTED GATE

The firefighter can use the same cut sequence as an Inverted "L" cut. It may help to have another firefighter keep pressure on the gate to keep it from moving.

SHEET CURTAIN DOORS

Sheet curtain doors look similar to rolling steel doors, but they are constructed of thin steel panels instead of steel interlocking slats. The panels are joined together to form a continuous panel which operates by rolling around a spring loaded, manually or mechanically operated drum at the top of the door. This type of door can be forced by using the Inverted “L”.

GARAGE DOORS/RESIDENTIAL SECTIONAL DOOR

Sectional doors are comprised of steel or wood sections that are hinged to each other and open and close by traveling vertically and horizontally in tracks mounted in the door jamb and in tracks mounted in the ceiling. This type of door can be forced by using Inverted "L" technique. Usually, there is metal bracing on the back of the door that is difficult to reach with the depth of cut of the circular. Also, each section has hinges that should be avoided. The hinges are located between sections; therefore cut through the middle of a section (the "field"), not in between sections.

The following methods demonstrate different ways to force entry into a garage door. It is important during initial size-up to determine which method will best support the fire attack, while providing customer service.

Method 1: This method is simple and creates little or no damage to the garage door being opened. It requires that the garage has a garage to opener installed with a release latch. Not only does this method create minimal damage, it enable the firefighters to easily secure the garage door once the incident is over. This method can be achieved with the basic lock-out kits that we carry (Slim Jim and/or Big Easy kit).

A wedge and/or inflatable bag create a gap between the door and jamb

The latch release is located through the window

The rod or Slim Jim is inserted to the gap

The rod or Slim Jim is hooked on the release latch and pulled downward

The garage door is lifted into the open position.

ALTERNATES TO METHOD 1

If unable to utilize the lock-out kit to create a gap in the door, the following are additional ways the latch release can be pulled with still creating minimal damage to the door and being able to secure the door once with incident is over.

The window closest to the latch can be broken and the firefighter can easily reach in and pull the latch release.

Once the door has been confirmed having a door opener (key pad on the outside), a hole can be made in the middle of the door. If the pick head is used, a rod can be inserted. A circular saw may also be use cutting a small triangle, large enough for the firefighter to reach their arm into.

Note: The firefighter must know the condition of the garage before reaching in and pulling

METHOD 2: INVERTED "L"

Determine what condition is behind the door.

Start the horizontal cut just above head level cutting between the panel to avoid the hinges.

Make a downward cut about 6" below the horizontal cut to prevent to door from falling until the firefighter is ready.

Create a triangle so the saw can cut through the angle iron at the bottom of the door.

Note: The final cut should be where cut 1 and cut 2 meet. This allows the firefighter to control at what point the door opens.

GARAGE DOORS/RESIDENTIAL TILT-UP DOOR

Tilt-up doors are single piece doors constructed of wood or thin metal and hinged at the middle to swing up and down. This type of door can be forced by using the "Inverted L" cutting technique, but try the lock first. Similar to the sectional door, this door has metal bracing on the back of the door that is difficult to reach with the depth of cut of the circular saw.

If the springs or hinges on an overhead door have been exposed to heat or fire, they may be weakened to the point of being incapable of supporting a door. In such a case, the door must be supported in the open position with a pike pole, vice grips or similar tool. Cutting a door completely out of the way is a viable option if supporting the door is difficult to do safely.

AIRPLANE HANGAR DOORS
Airplane hangar doors usually cover a large span opening and can be framed with heavy gauge metal and skinned with a thinner gauged insulated metal. This section will cover the most common hangar doors that will be found in the Valley. The following are the types of airplane hangar doors that are most commonly found:

- Bi-fold
- Sliding
    - Mechanical
    - Manual

BI-FOLD HANGAR DOORS
This is the most common hangar door is use. It is framed of thick tubular steel and skinned with light gauge metal that is usually insulated. The door is lifted utilizing anywhere from one to multiple motors depending on the size of the door. Newer doors are lifted with straps while older doors use approximately 1/4 inch metal wire.

These doors MUST BE OPENED USING THE MOTORS and many airports have back up generators to lift these doors in case of a power outage.

It is imperative to know that these doors will close VIOLENTLY if the strap or wires holding the door up fail.

If a fire is involved in a hangar with the Bi-Fold in the open position, EXTREME CAUTION must be utilized when operating in the structure.

Most aircraft hangars are constructed of light gauge metal that is not safe to operate on the roof of. The ladder company's best bet for ventilation is through these large doors. <u>IF POSSIBLE AND COORDINATED WITH COMMAND, DOORS SHOULD BE MECHANICALLY OPENED PRIOR TO SECURING UTILITIES.</u>

HANGAR DOORS

Many hangars today also have offices in the back of the hangar. The back of the hangar may even be two stories and require a search and rescue. The quickest, most efficient way to gain access to a hangar is through a side door. Doors are located inside of the hangar door or in close vicinity.

Multiple doors built into the bi-fold hangar doors.

Side door next to the hangar door

Offices both upstairs and downstairs inside the hangar.

COMPONENTS OF A BI-FOLD HANGAR DOOR

NEWER DOOR

Motor mounted on the lower portion of the door.

OLDER DOOR

Motor mounted to the upper portion of the door.

Motor turns a spindle the wraps the strap causing the door to lower and raise.

Motor turns a spool causing the wire to pull up or down on the lower portion of the door.

Automatic lock mounted high on the door

Manual lock located about chest level

Heavy gauge metal steel frame grid

Heavy gauge metal steel frame grid

SLIDING HANGAR DOOR: MECHANICAL

It is common to find large sliding hangar doors that run off of a motor system. Although these doors are easiest to open while the power is on, when the power is off, these doors will be able to be opened manually.

These doors come in a variety of size and may open from one end, or from the middle. They slide in guides on the ground that are staggered at different distances that allow the door to stow away in a smaller area in the hangar.

MANUALLY OPENING A SLIDING HANGAR DOOR

Shut off the power to the motor, this will release the motor lock.

Push one section of the door starting with the door closest to the inside of the hangar.

MANUAL SLIDING HANGAR DOORS

Manual sliding doors are house smaller aircraft and are reasonably easy to force open. They are most commonly found to slide from side to side, but also may be found accordion style. They are generally locked from the outside with padlocks. Once the locking mechanism is opened, the door can be opened manually with ease.

Force the padlocks and slide the doors open.

If locks are high security, the tabs that hold the lock in place may be cut.

Accordion style door may have padlocks or a keyway from the outside. Normal thru-the-lock entry methods may be utilized.

ADDITIONAL TYPES OF LOCKS AND WAYS TO SECURE AND PROTECT

747 Lock

Covered Lock

Earring Lock

Long Bow

Master Lock

Short Bow

Shielded Lock

Soda Machine

Rubber Coated

Different Locks

Lock Box

Shield

Bottom Lock Cover

Bottom Lock Holder

Bottom Rail Lock

Mushroom Lock

Horseshoe Lock

Bottom Rail Slide

Bottom Lock

Bottom Slide Lock

Non Removal Shield

No Shield

Removal Shield

Lock Holders

Welded Lock Cover

Lock Cover

Static Bar

Secured Slate

Section 15

Miscellaneous Security Problems

MISCELLANIOUS SECURITY PROBLEMS

WINDOW BARS

As a rule, bars are fixed and permanent. Gates are designed to open, but may be fixed.

Window Bars
These obstacles come in a variety of sizes, shapes and strengths. They may be mounted to the window frame with screws or bolts, or set into the mortar. Bars and gates are used primarily for security and leave very little room for error in the case of fire.

Attacking and removing these obstacles during a fire situation takes time. If fire is being vented through the window being worked on, it becomes more of a challenge. Anyone trapped behind them has little chance of survival.

Forcing Window Bars
Bars are usually secured to a window at four points. The mounting point may be a lag bolt into the mortar or brick, or the mounting point may be part of the brickwork.

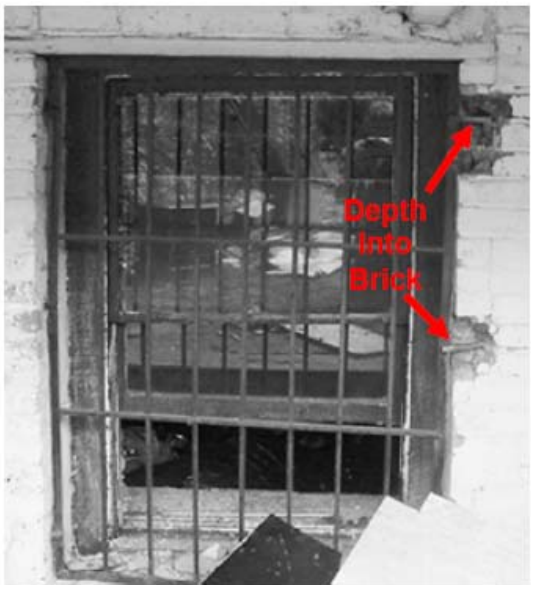

WINDOW BARS

Forcing Window Bars

Bars are attacked at the weakest point. Striking the mortar or brick work where the bar is mounted, may dislodge the anchor point. Dislodge two and bend the bars away, or pry out using the Halligan.

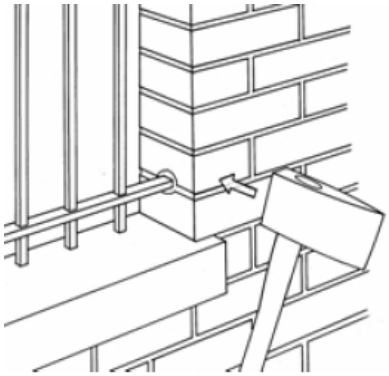

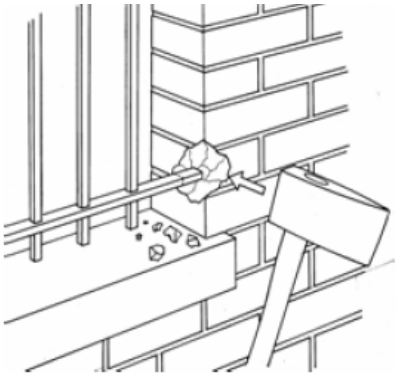

Using a Halligan, the firefighter may be able to pry the bar away from its mount.

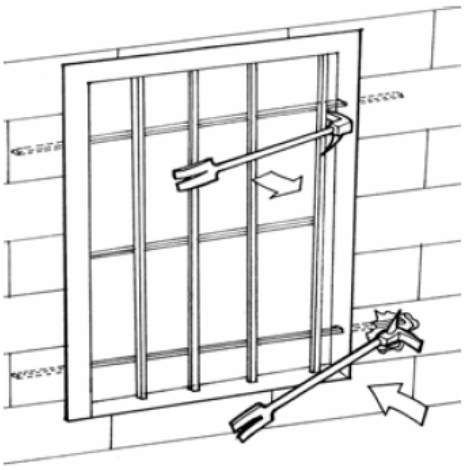

Using a power saw, cut the mounting bracket and remove the entire bar assembly, or cut two sides and bend the bars away.

WINDOW BARS

Forcing Window Bars

Place the hydraulic tool between the angle iron outer edge of the window bar and the exterior of the building, as close as possible to the lag bolt, and spread.

If the spread is not sufficient, the tool can be repositioned directly at the point of attachment.

After forcing the attachment points on one side, push the gate to the side (while still attached with a hook), allowing an unobstructed opening. Pushing the gate to the side still attached will cause the gate to break free, dropping it to the ground. Keep this area clear to prevent any one from getting hit by the falling gate.

Note: Start this operation from the bottom and work up to stay out of the path of the gate if it should fall.

Window Bars: Various Types and Mountain

WINDOW BARS

Window Bars: Various Type and Mountings

WINDOW GATES

Gates come in a variety of types. They vary in size and strength. From the “Scissor” type to the more formidable “Jail-House” type gates.

Gates are usually attacked at the hinge side, since the swing side is usually secured with a pad-lock. Using the Halligan Tool, the frame of the gate is pulled away from the window frame. The window gate is usually held in place with screws.

In doing this, the window must be broken. This will complicate the action because we have “vented” the area we want to access. In gaining access, the entire gate should be removed, as well as the window sash and any window decorations (curtains, verticals, etc.).

Note: When entering via a window with a gate, you have to ensure your way out. Other windows may be similarly fortified.

WINDOW GATES

Approved Type Window Gate

Most people are very concerned about their security and will use any method it takes to guarantee it.

In many municipalities, approved gates may be used. This is to eliminate the need for padlocks or other entrapment devices. These “approved” gates usually have a locking device that is in the form of a lever enclosed behind a small door, thereby eliminating the need for a padlock.

There is no “one way” to remove these obstacles. Like everything else in fighting fires, you have to take what is given you and make the best of it.

Outside View

Release Mechanism

Inside View

Forcing Approved Type Window Gates

The following are suggested methods:

Using the **FORK** end to pry the hinge away from the frame. You will get more leverage this way, but you may be restricted due to a fire escape.

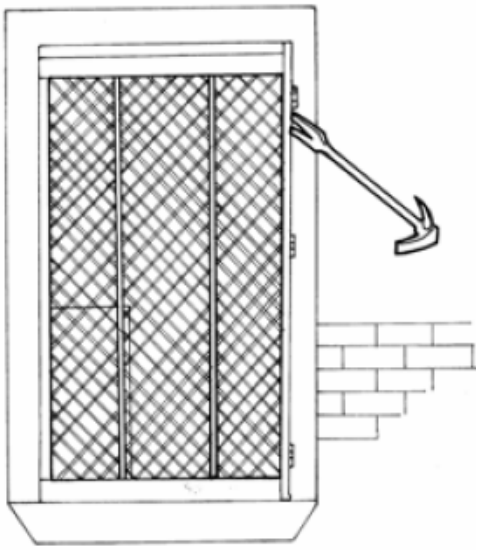

WINDOW GATES

Forcing Approved Type Window Gates

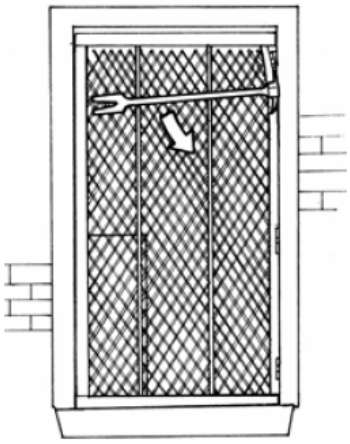

Use the ADZ end, if there is no room, use the FORK end

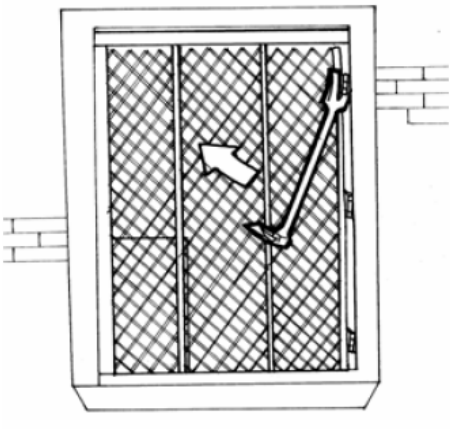

Pry off the hinge using the FORK end.

Swing Bar Gate (Jail-House Type)

This type of gate is more formidable as it is made of heavy gauge iron bars.

The locking devices are part of the problem as this is not an approved type gate. There is no way to prepare yourself for what may be securing these devices.

Swing Bar Gate

Inside View Closed

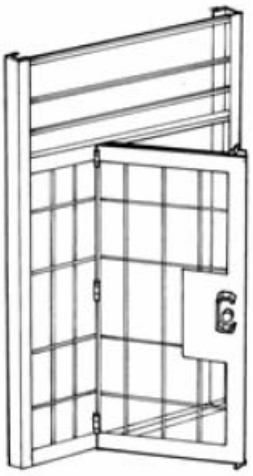

Inside View Open

WINDOW GATES

Forcing Swing Bar Gate

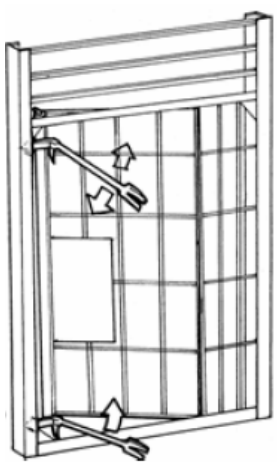

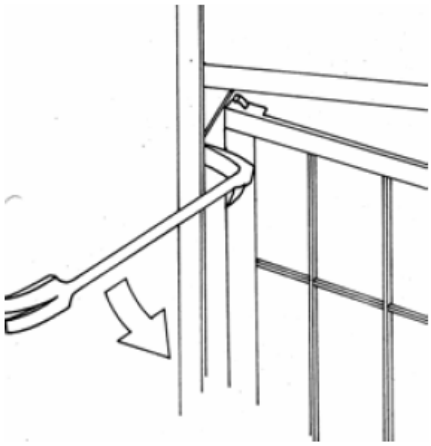

Outside View Forcing Gate

IRON GATES

Usually found at the main entrance. They are mounted like a standard door with hinges on one side and a lock on the other. What makes them formidable is the inability to spread the jamb. They are generally mounted in a metal frame.

If used on a secondary entrance, they are usually more fortified than a simple locking device.

Attacking the lock side in a conventional manner is usually sufficient to gain entry.

LIGHTWEIGHT SECURITY SCREEN DOORS

These doors are found on the residences to protect the front door. They are mounted on the outside of the door with hex bolts or carriage bolts. The locks are usually made of a deadbolt and may have a standard deadbolt latch or be double keyed. These doors can easily be overcome by several simple techniques.

The screen mesh can be hit with an axe or a sledge. Once the screen separates from the door, the firefighter can reach in and unlatch the deadbolt and knob.

With the ADZ end of the Halligan, the frame can be pried away from the house where the bolts are lagged in.

The lock complete locking assembly can be cut out. It is important to note that the cuts should be made ABOVE the plate metal and only cut though the bars and the frame. This will save time.

With the ADZ end of the Halligan, go above the deadbolt and move the Halligan downward to force the bolt out of the housing in the frame.

Use the circular saw to cut through the deadbolt at a 45 degree angle.

PHOTOS

TO

BE

PLACED

HERE

CHILD GUARD GATES

Child guard gates come in a variety of weights and sizes. There usually are three to four horizontal bars, which inter-lock and slide to the prescribed opening. The device is secured across the lower sash of the window to prevent children from falling out.

They are usually secured on the outside of the sash to the window frame. They can also be mounted to the inside of the window.

In most cases, screws are used to secure them.

Removing Child Guard Gates
Removing them under **non-fire situations** is usually not a problem. Striking the vertical frame away from the mounting screw will generally be sufficient. In a fire situation, with heat and possible flames, the member may not be able to stand up and swing the tool.

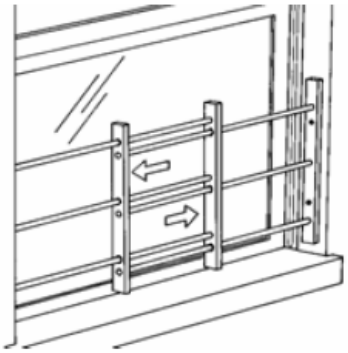

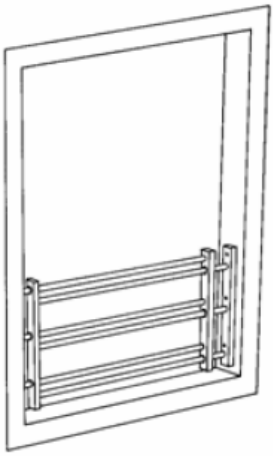

If the gate is larger than the window it was designed for, the vertical frames will be too close to the side of the window frame, preventing placement of the prying tool.

CHILD GUARD GATES

Removing Child Guard Gates

Metal frame windows will be more difficult to force than wood frame windows. Another method of forcing them open would be to strike the horizontal bar where it joins the upright that is screwed into the frame.

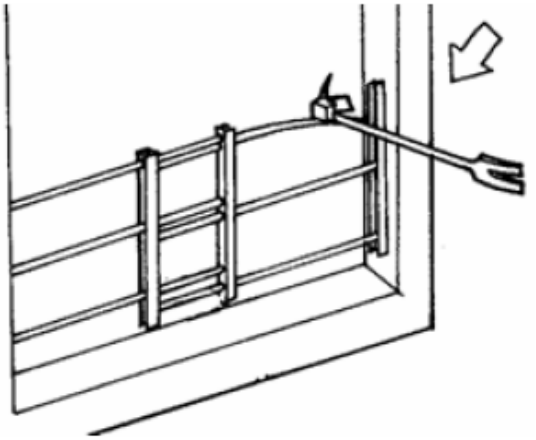

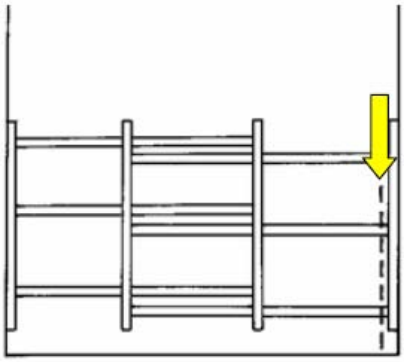

Cutting the horizontal bars is another option, but that calls for a different tool such as a power saw or reciprocating saw. Bolt cutters may not work.

WINDOW/DOOR BARRIERS

HUD WINDOWS/DOORS

When buildings and occupancies become vacant, the owner will secure the premises with barriers to prevent vandalism and trespassing. These barriers need to be removed when firefighters are interior.

One or two sheets of plywood over a window opening secured with two or four, 2 x 4's. The 2x4's are wider than the window opening and hold the plywood in place. One or two bolts go through the 2x4's and secure the plywood in place.

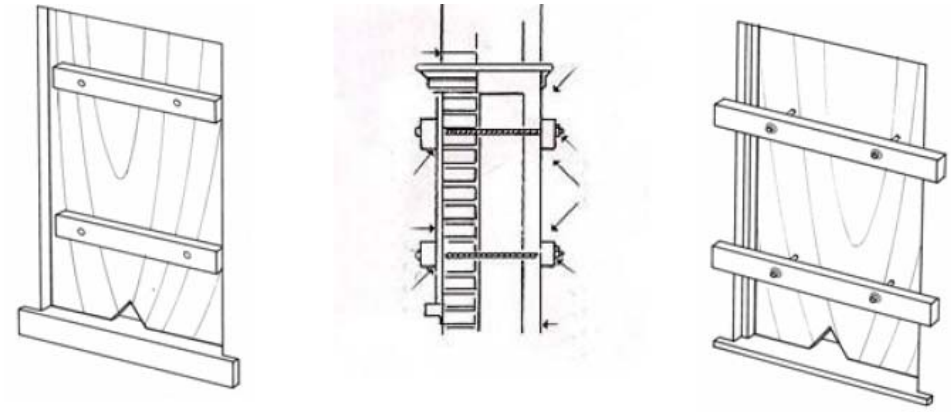

Outside View Side View Inside View

Forcing A HUD Window

To remove this obstacle, using the **PIKE** of the Halligan Tool or a **SLEDGE HAMMER** strike and split the 2x4 at the bolt. Splitting one side and rotating the other is usually sufficient. This would have to be done to both of the 2x4's.

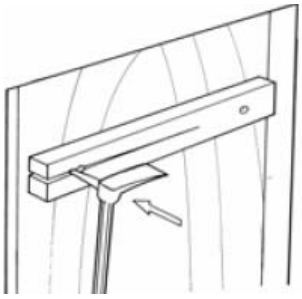

Another method to remove these barriers is to use the circular saw. In this method, the bolt head would be cut at an angle. Once the bolt heads are removed, you can drive the bolt through and remove the barrier.

BULKHEAD DOORS

Security of bulkhead doors can vary. Some may be quite formidable and others may be secured by a simple locking device (sliding bolt or hook and eye). The simple device is usually not a problem. It is important to open this door because victims may attempt to flee the fire by going up to the roof.

Section 16

Tips and Techniques

TIPS

Halligan Tool

Marking the Halligan Tool for judging depth of the door when setting the tool.

Mark the adz and the fork with a notch approximately 1¾ inches up from the end to denote the depth of the door. When trying to “lock” the tool in, this will give you assurance that you are in deep enough.

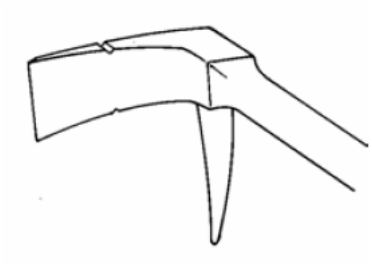

Adz End.

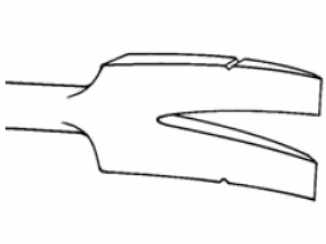

Fork End

Squaring the Shoulder

By squaring the shoulder of the fork end, it allows another striking surface in tight spaces and when the tool is recessed.

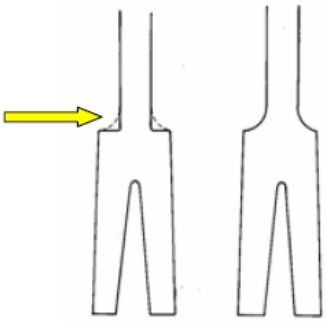

TIPS

Notching the Adz

This may give you the option of pulling a cylinder, getting a lock on, or shearing a bolt or screw. The edge is filed to a clean edge.

Section 17

Definitions

"A" Tool	A lock puller (Officer's Tool).
Adz	The axe-like tool with a curved blade at right angle to the handle (shaft).
Arch	The inside curve on the fork end of the Halligan Tool where the two blades of the fork are joined.
Bam-Bam Tool	A dent puller adapted for pulling lock cylinders.
Batter the Door	Striking the door, doorframe, with an axe, maul or Halligan Tool.
Bevel Side	The curved side of the fork end of the Halligan Tool.
Bolt	A fastening device that is square or round that slides into a notch (keeper).
Chocking the Door	A means of keeping a door open.
Claw Tool	A forcible entry tool.
Cylinder Guard	A metal security plate mounted over the lock cylinder.
Door Flexes	Door bends but does not break or open.
Door Frame	A structural boarder into which a door is hung, also known as a doorbuck or doorjamb.
Door Rail	The outer edge of a door, usually the strongest part of the door.
Door Stop	That portion of the doorframe that prevents the door from winging past the frame.
Doughnut Lock	American 2000 series lock "Hockey Puck."
Duckbill Breaker	A tool designed for forcing padlocks.
Fasco Lock	American 2000 series lock used for securing maintenance rooms in public housing developments.
Fox Lock	A double bar lock.
Gap the Door	The initial opening made in the door and or frame to create a purchase point.
Glass Door	A tempered glass door.

Guarded Keyway	A device over the keyway to prevent the keyway from being removed.
Halligan Tool	Forcible entry tool.
Hockey Puck	American 2000 series lock **Horseshoe Padlock** type of heavy-duty lock.
HUD Window/Door	A method of securing an opening with plywood and 2 x 4's horizontal to the opening securing the plywood.
Hydra-Ram	A hydraulic forcible entry tool.
Inward Swinging	Door swings **AWAY** from you.
Irons	Set of forcible entry tools, usually an axe and Halligan Tool.
Jimmying a Door	Separating (spreading) of the door away from the jamb.
K-Tool	A tool designed for pulling lock cylinders.
Kalameine Door	A door covered with metal.
Kelly Tool	A forcible entry tool.
Key Tool	A set of tools used in conjunction with K-Tool to open locks.
Latch	A fastening device that is angled to slide into a notch (keeper).
Lock In	Getting the Halligan Tool or lock puller tool behind the doorframe.
Lock Puller	A tool designed to pull lock cylinders.
Mortise Lock	A locking device that is designed to fit into the cavity in the edge of the door.
Multi-Lock Door	A door with an integrated lock system which has four pins locking the door into the jamb at four different points.
Officer's Tool	Lock puller or "A" tool.
Outward Swinging	Door swings **TOWARD** you.
Pivoting Deadbolt	A fastening device that is square and pivots into a notch (keeper).
Pocket Door	An interior sliding door that slides into a partition or cavity in the wall.

Police Lock	A vertical bar lock.
Purchase Point	The opening made in the door / door frame for forcing the door.
Rabbit Tool	A hydraulic forcible entry tool.
Rail of the Door	The outer edge of a door, usually the strongest part of the door.
Replacement Door	A pre-hung door and jamb installed into an **EXISTING** frame
Rim Lock	A surface mounted lock.
Set the Tool	Driving the Halligan Tool into the GAP until the arch of the fork is even with the door and or the door stop.
Shoulder	The topside of the fork end at the shaft.
Slipping the Door	Moving the Halligan Tool up and down to free the tool that may be stuck.
Springing the Door	Moving the Halligan Tool side to side (in and out) to free the tool that may be stuck.
Stacked Locks	A series of locks placed close together on a door.
Static Bar	A fastening device which can be mounted across the door.
Stem	On a rim lock, that portion of the lock cylinder that locks or unlocks the mechanism.
Thru-the-Lock	Gaining entry by attacking the locking device and opening the door with little or no damage to the door and or frame.
Tubular Dead Bolt	A cylinder lock that is a cross between a mortise lock, rim lock and a Key-in-the-Knob lock. May be double-keyed.
Wrapped Lock	Padlock with steel welded to the lock